6. 2-Way Cassette Type Indoor Unit

6.1 Features

AB072MBERA
AB092MBERA
AB122MBERA
AB162MBERA
AB182MBERA

Compact design: only 220mm height

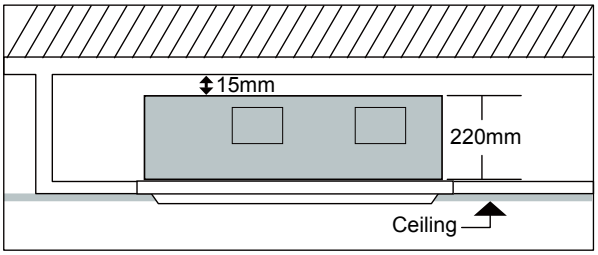

Built in high head drain pump

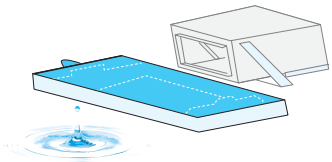

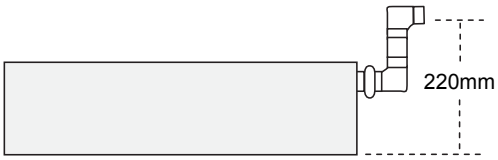

Ceiling antifouling design
Unique antifouling design

Two way air flow
Quite operation
5 models ranging from 2.2kW to 5.6kW

6.2 Specification

MODEL			AB072MBERA	AB092MBERA	AB122MBERA
Power supply		Ph-V-Hz	1,220~230,50/60	1,220~230,50/60	1,220~230,50/60
Cooling	Capacity	kBtu/h	7.5	9.6	12.3
	Capacity	kW	2.2	2.8	3.6
	Power input	W	90	90	90
	Current	A	0.5	0.5	0.5
Heating	Capacity	kBtu/h	8.5	10.9	13.6
	Capacity	kW	2.5	3.2	4
	Power input	W	90	90	90
	Current	A	0.5	0.5	0.5
	Heating capacity at low temp.	kW	2	2.5	3.2
Operating current		A	0.43	0.43	0.43
Power consumption		kW	0.09	0.09	0.09
Indoor motor	Brand		Match-Well	Match-Well	Match-Well
	Model		YF120-30-6A2	YF120-30-6A2	YF120-30-6A2
	Type		AC	AC	AC
	Insulation class		B	B	B
	IP class		IP20	IP20	IP20
	Power input	W	70	70	70
	Power output	W	35	35	35
	Capacitor	μF	3μF /450v	3μF /450v	3μF /450v
	Speed (High/Middle/Low)	rpm	670/530/440	670/530/440	670/530/440
Indoor fan	Brand		Haier	Haier	Haier
	Type		Centrifugal	Centrifugal	Centrifugal
	Quantity		1	1	1
Indoor coil	a. Number of rows		2	2	2
	b. Tube pitch (a)×row pitch (b)	mm	22x19.04	22×19.04	22×19.04
	c. Fin spacing	mm	1.85	1.85	1.85
	d. Fin type (code)		Hydrophilic aluminum		
	e. Tube outside dia. and type	mm	Φ9.52 plate	Φ9.52 plate	Φ9.52 plate
	f. Coil length×height×width	mm	1542.6x101.6x38.08	1542.6×101.6×38.08	1542.6×101.6×38.08
	g. Number of circuits		1	1	1

MODEL			AB072MBERA	AB092MBERA	AB122MBERA
Cabinet	Cabinet coating type		PS	PS	PS
	Cabinet salt spray test duration	Hour	72	72	72
	Control box IP class		IP20	IP20	IP20
Construction	Sheet metal thickness		0.8	0.8	0.8
	Drain pan material		PS	PS	PS
	Drain pan insulation		20	20	20
	Drain pump option		Standard 700mm	Standard 700mm	Standard 700mm
	Branch outlet option		No	No	No
Indoor wall	Material		PS	PS	PS
	Thickness	mm	20	20	20
	Double or single skin		Single	Single	Single
Air filter	Material		PP	PP	PP
	Mesh		100	100	100
	Pressure drop	Pa	5	5	5
Piping dimension	Liquid pipe	mm	6.35	6.35	6.35
	Gas pipe	mm	9.52	9.52	12.7
	Drain hose	mm	32	32	32
Panel	Model		P2B-1055IB	P2B-1055IB	P2B-1055IB
	Dimension	mm	1055*68*680	1055*68*680	1055*68*680
	Packing	mm	1110*161*720	1110*161*720	1110*161*720
	Net weight	kg	7	7	7
	Gross weight	kg	8	8	8
Fresh air dimension		mm	100*70	100*70	100*70
Sound pressure level (H/M/L)		dB (A)	42/37/33	42/37/33	42/37/33
Sound power level (H/M/L)		dB (A)	55/50/46	55/50/46	55/50/46
Standard static pressure		Pa	0	0	0
Indoor air flow (H/M/L)		m^3/h	840/700/550	840/700/550	840/700/550
Dimension (W*H*D)		mm	817*220*620	817*220*620	817*220*620
Packing (W*H*D)		mm	1015*278*695	1015*278*695	1015*278*695
Net weight		kg	21	21	21
Gross weight		kg	23	23	23

Nominal condition: indoor temperature (cooling): 27DB (°C)/19WB (°C), indoor temperature (heating): 20DB (°C)
Outdoor temperature (cooling): 35DB (°C)/24WB (°C), outdoor temperature (heating): 7DB (°C)/6WB (°C)
The noise level will be measured in the third octave band limited values, using a Real Time Analyser calibrated sound intensity meter. It is a sound pressure noise level.

MODEL			AB162MBERA	AB182MBERA
Power supply		Ph-V-Hz	1,220~230,50/60	1,220~230,50/60
Cooling	Capacity	kBtu/h	15.4	19.1
	Capacity	kW	4.5	5.6
	Power input	W	110	110
	Current	A	0.62	0.62
Heating	Capacity	kBtu/h	17.1	21.5
	Capacity	kW	5	6.3
	Power input	W	110	110
	Current	A	0.62	0.62
	Heating capacity at low temp.	kW	4	5
Operating current		A	0.56	0.56
Power consumption		kW	0.11	0.11
Indoor motor	Brand		Match-Well	Match-Well
	Model		YF120-30-6A2	YF120-30-6A2
	Type		AC	AC
	Insulation class		B	B
	IP class		IP20	IP20
	Power input	W	70	70
	Power output	W	35	35
	Capacitor	μF	3μF /450v	3μF /450v
	Speed (High/Middle/Low)	rpm	670/530/440	670/530/440
Indoor fan	Brand		Haier	Haier
	Type		Centrifugal	Centrifugal
	Quantity		1	1
Indoor coil	a. Number of rows		2	2
	b. Tube pitch (a)×row pitch (b)	mm	21×13.2	21×13.2
	c. Fin spacing	mm	1.5	1.5
	d. Fin type (code)		Hydrophilic aluminum	Hydrophilic aluminum
	e. Tube outside dia. and type	mm	Φ6.35 Inner groove tube	Φ6.35 Inner groove tube
	f. Coil length×height×width	mm	1581×105.6×39.6	1581×105.6×39.6
	g. Number of circuits		4	4

MODEL			AB162MBERA	AB182MBERA
Cabinet	Cabinet coating type		PS	PS
	Cabinet salt spray test duration	Hour	72	72
	Control box IP class		IP20	IP20
Construction	Sheet metal thickness		0.8	0.8
	Drain pan material		PS	PS
	Drain pan insulation		20	20
	Drain pump option		Standard 700mm	Standard 700mm
	Branch outlet option		No	No
Indoor wall	Material		PS	PS
	Thickness	mm	20	20
	Double or single skin		Single	Single
Air filter	Material		PP	PP
	Mesh		100	100
	Pressure drop	Pa	5	5
Piping dimension	Liquid pipe	mm	6.35	6.35
	Gas pipe	mm	12.7	12.7
	Drain hose	mm	32	32
Panel	Model		P2B-1055IB	P2B-1055IB
	Dimension	mm	1055*68*680	1055*68*680
	Packing	mm	1110*161*720	1110*161*720
	Net weight	kg	7	7
	Gross weight	kg	8	8
Fresh air dimension		mm	100*70	100*70
Sound pressure level (H/M/L)		dB (A)	44/39/34	44/39/34
Sound power level (H/M/L)		dB (A)	57/52/47	57/52/47
Standard static pressure		Pa	0	0
Indoor air flow (H/M/L)		m^3/h	840/700/550	840/700/550
Dimension (W*H*D)		mm	817*220*620	817*220*620
Packing (W*H*D)		mm	1015*278*695	1015*278*695
Net weight		kg	21	21
Gross weight		kg	23	23

Nominal condition: indoor temperature (cooling): 27DB (°C)/19WB (°C), indoor temperature (heating): 20DB (°C)
Outdoor temperature (cooling): 35DB (°C)/24WB (°C), outdoor temperature (heating): 7DB (°C)/6WB (°C)
The noise level will be measured in the third octave band limited values, using a Real Time Analyser calibrated sound intensity meter. It is a sound pressure noise level.

6.3 Dimension

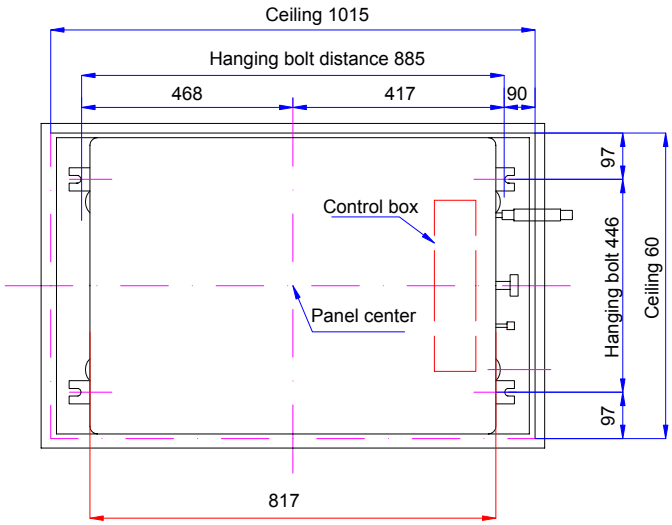

Code	Name
1	Hanging bolt
2	Pothook
3	Fresh air entrance
4	Exhaust outlet : 4
5	Liquid pipe connect hole
6	Gas pipe connect hole
7	Drain pipe connect hole
8	Natural drain
9	Power line entrance

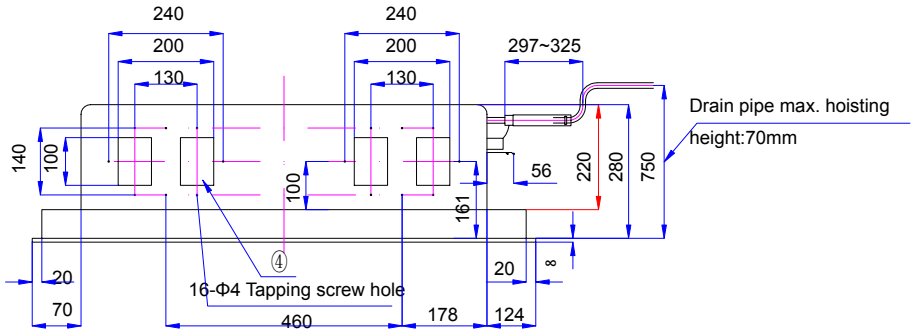

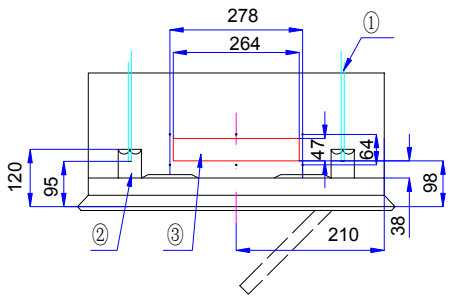

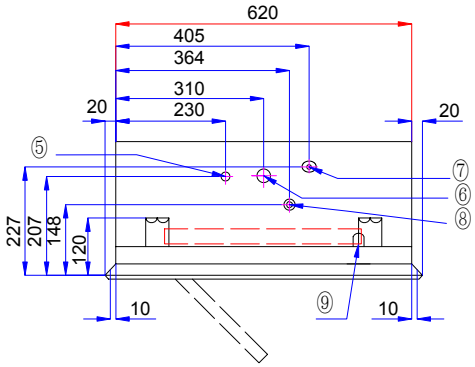

6.4 Piping diagram

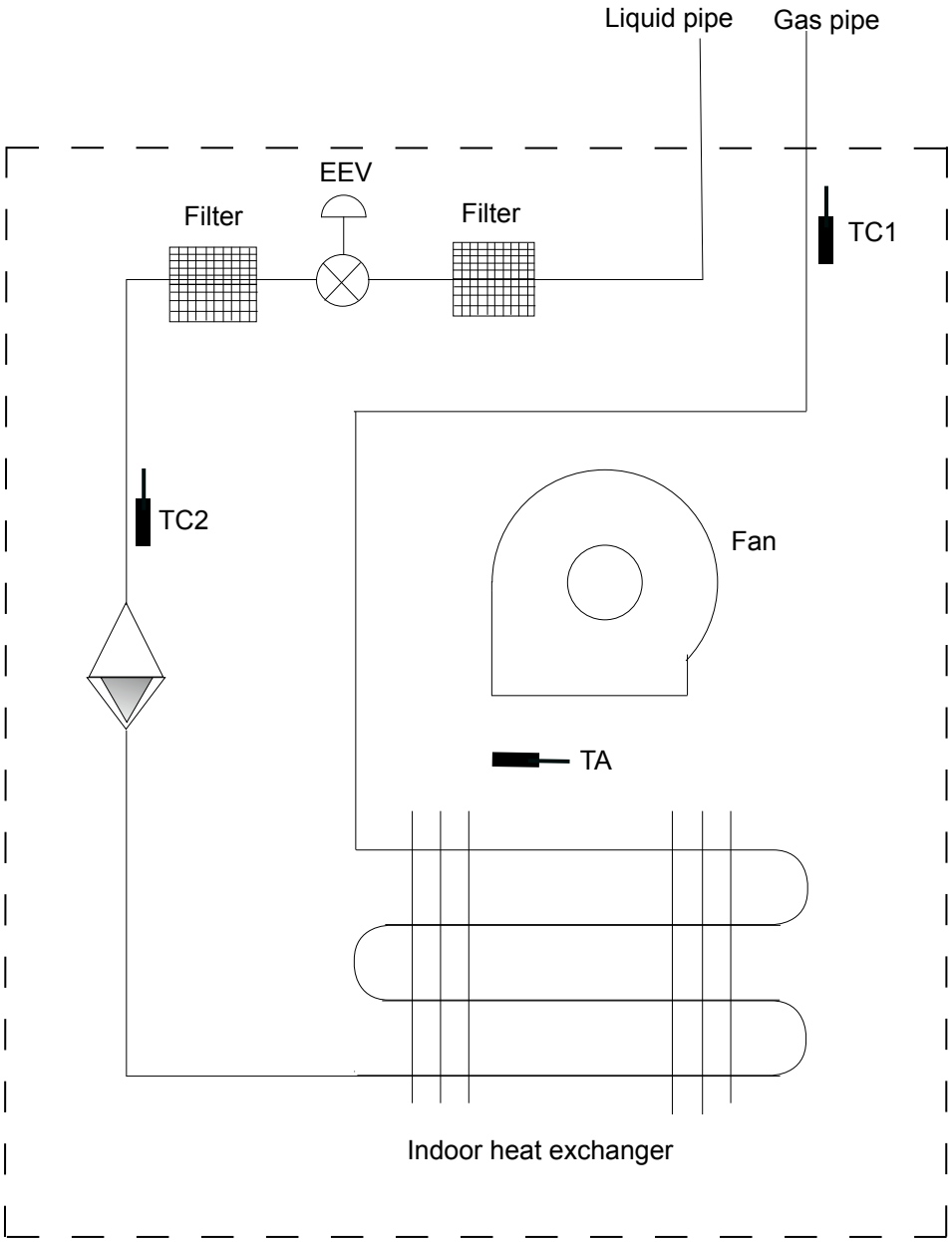

6.5 Wiring diagram

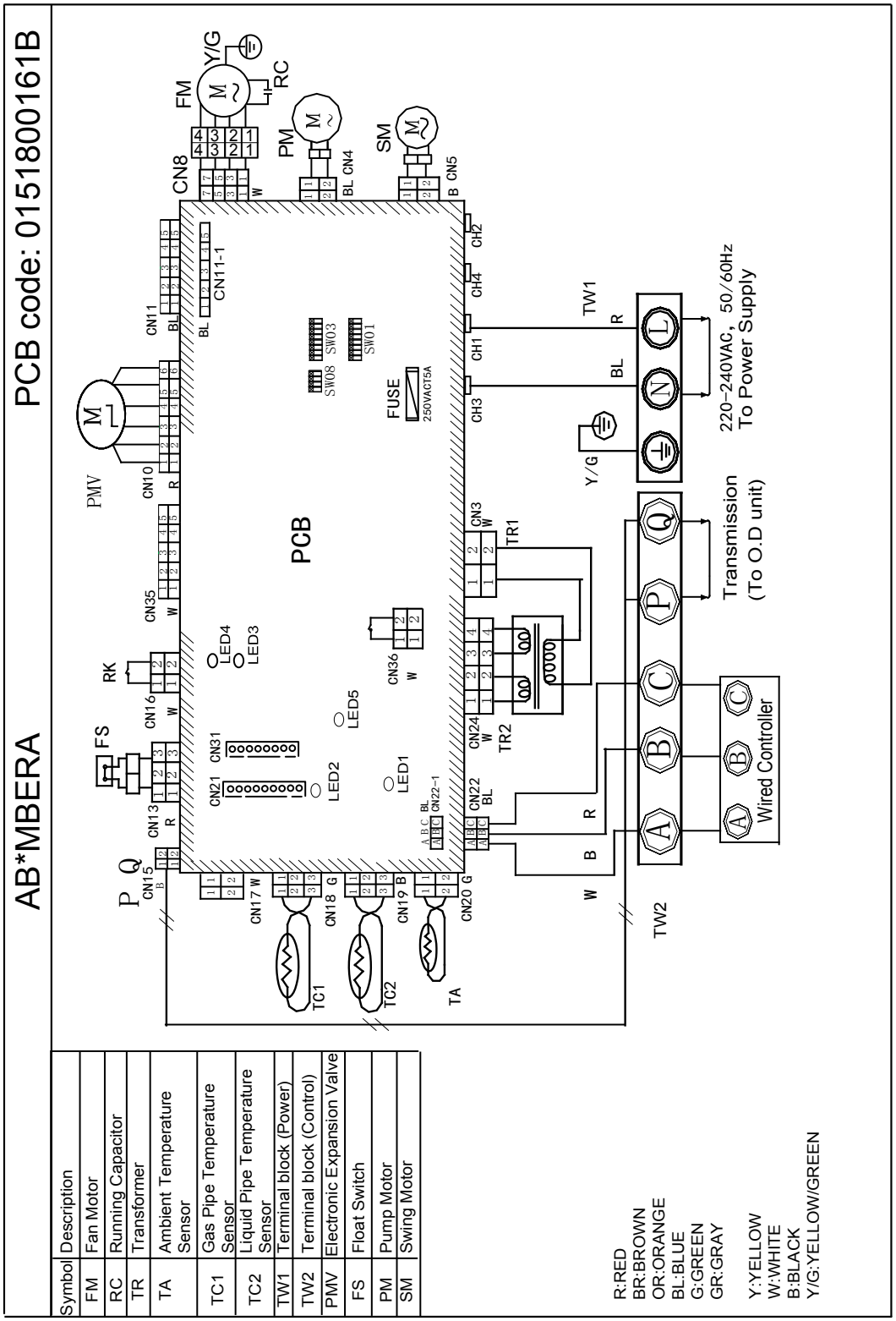

Symbol	Description
FM	Fan Motor
RC	Running Capacitor
TR	Transformer
TA	Ambient Temperature Sensor
TC1	Gas Pipe Temperature Sensor
TC2	Liquid Pipe Temperature Sensor
TW1	Terminal block (Power)
TW2	Terminal block (Control)
PMV	Electronic Expansion Valve
FS	Float Switch
PM	Pump Motor
SM	Swing Motor

AB*MBERA

PCB code: 0010451181A

Symbo	Description
FM	Fan Motor
RC	Running Capacitor
TR	Transformer
TA	Ambient Temperature Sensor
TC1	Gas Pipe Temperature Sensor
TC2	Liquid Pipe Temperature Sensor
TW1	Terminal block (Power)
TW2	Terminal block (Control)
PMV	Electronic Expansion Valve
FS	Float Switch
PM	Pump Motor
SM	Swing Motor
PG	Plastic Motor

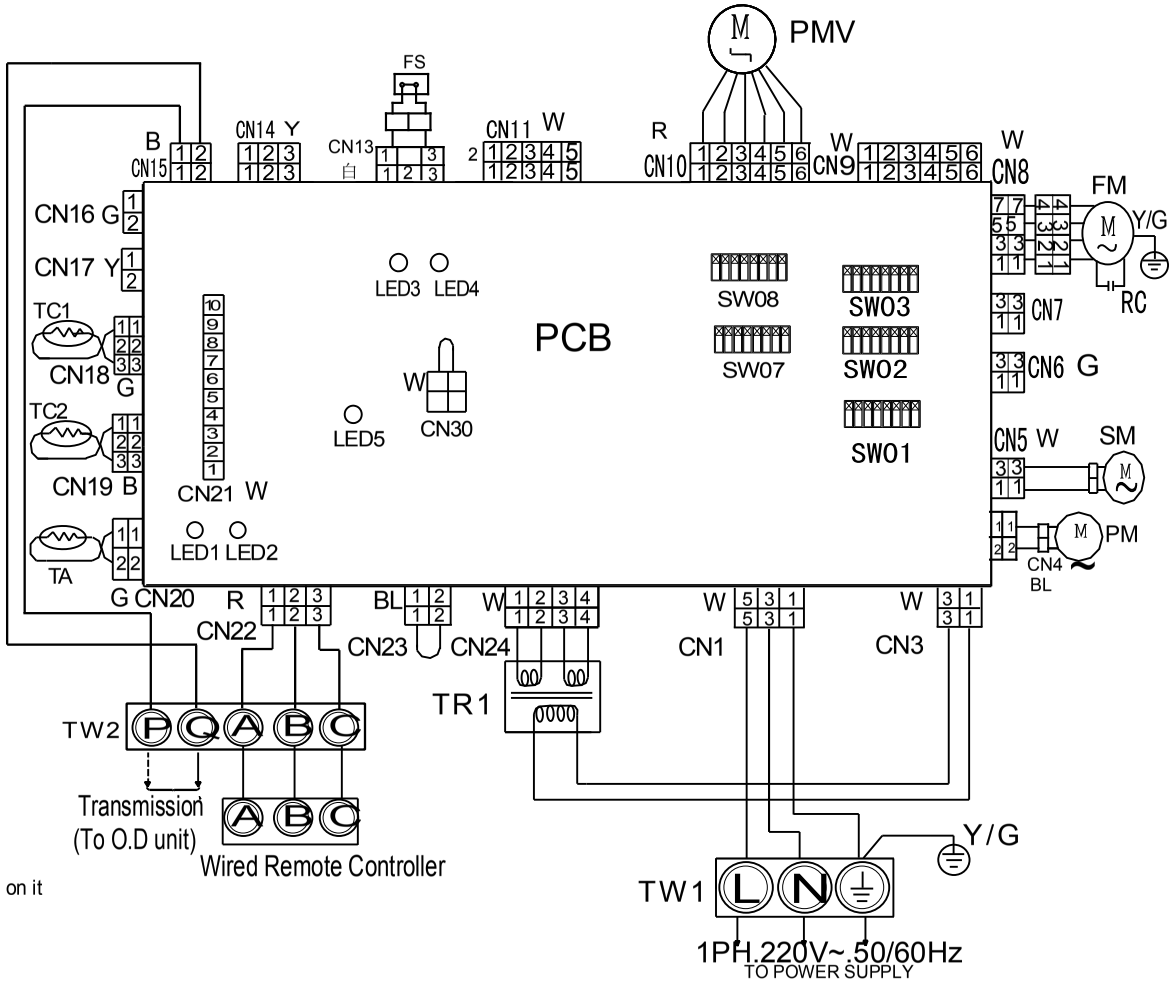

R:RED
BR:BROWN
OR:ORANGE
BL:BLUE
G:GREEN
GR:GRAY
Y:YELLOW
W:WHITE
B:BLACK
Y/G:YELLOW/GREEN

1. ⬡ is terminal block, the words on it are the sequence number
2. ▭ is printed circuit board

6.6 Electric characteristics

Unit					Power supply		Indoor fan motor		Power input (W)	
Model	Phase	Voltage	FQY	Volt. range	MCA	MFA	Output (W)	FLA	Cooling	Heating
AB072MBERA	1	220	50/60	198~242	0.5	1.6	35	0.4	90	90
AB092MBERA	1	220	50/60	198~242	0.5	1.6	35	0.4	90	90
AB122MBERA	1	220	50/60	198~242	0.5	1.6	35	0.4	90	90
AB162MBERA	1	220	50/60	198~242	0.5	1.6	35	0.4	110	110
AB182MBERA	1	220	50/60	198~242	0.5	1.6	35	0.4	110	110

Symbols:
MCA: Min. circuit amps (A)
MFA: Max. fuse amps of circuit breaker
Output: Fan motor rated output (w)
FLA: Full load amps (A)

Note:

1. Voltage range
The units are applicable for the electrical systems where voltage supplied to unit is in the range.
2. Maximum allowable voltage unbalance between phases is 2%.
*3. MCA=1.25*FLA MFA≤4*FLA*
4. Power supply uses the circuit breaker.

6.7 Air velocity and temperature distribution

a. Cooling / Air velocity distribution

Cooling
Blowy angle: 40
Air Velocity distribution

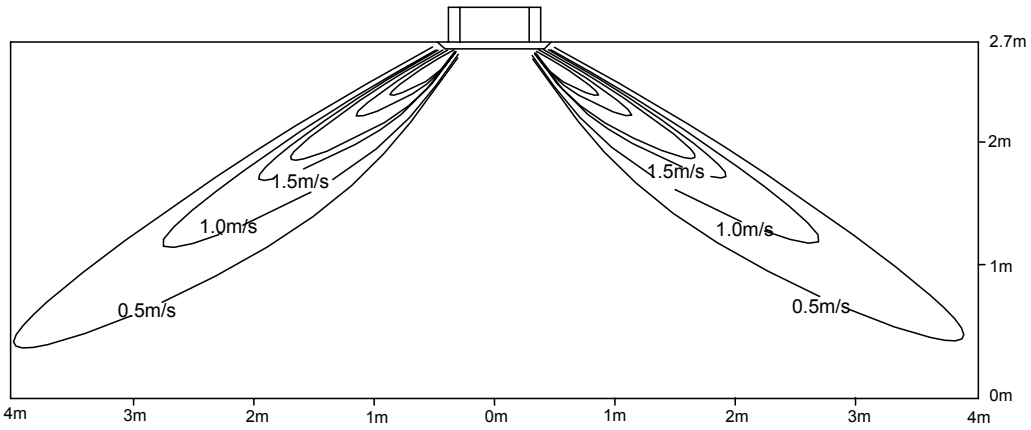

b. Cooling / Temperature distribution

Cooling
Blowy angle: 40
Temperature distribution

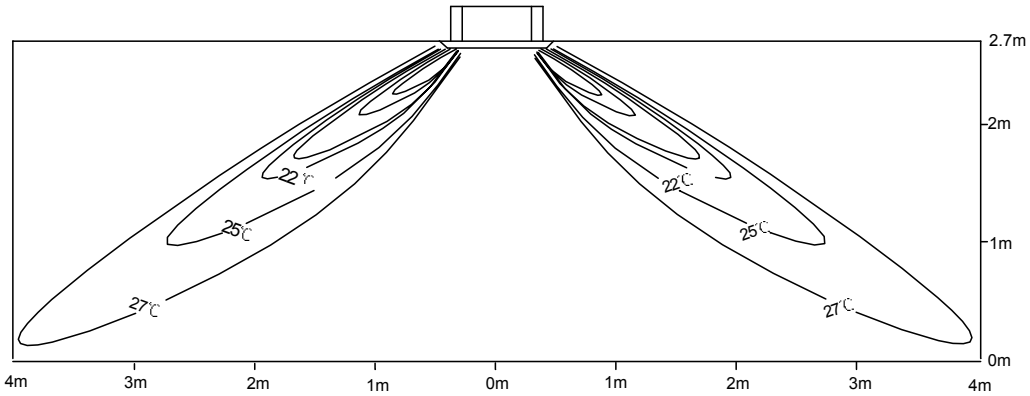

c. Heating / Air velocity distribution

Heating
Blowy angle: 70
Air velocity distribution

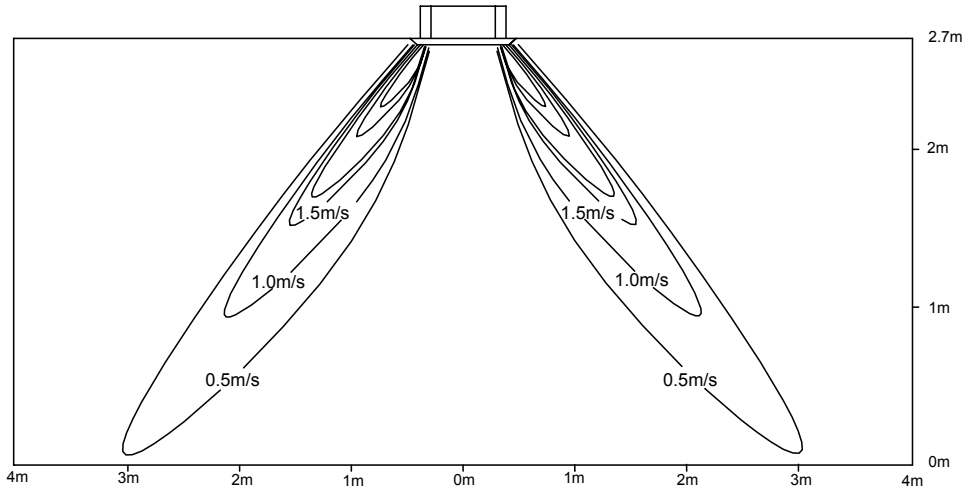

d. Heating / Temperature distribution

Heating
Blowy angle: 70
Temperature distribution

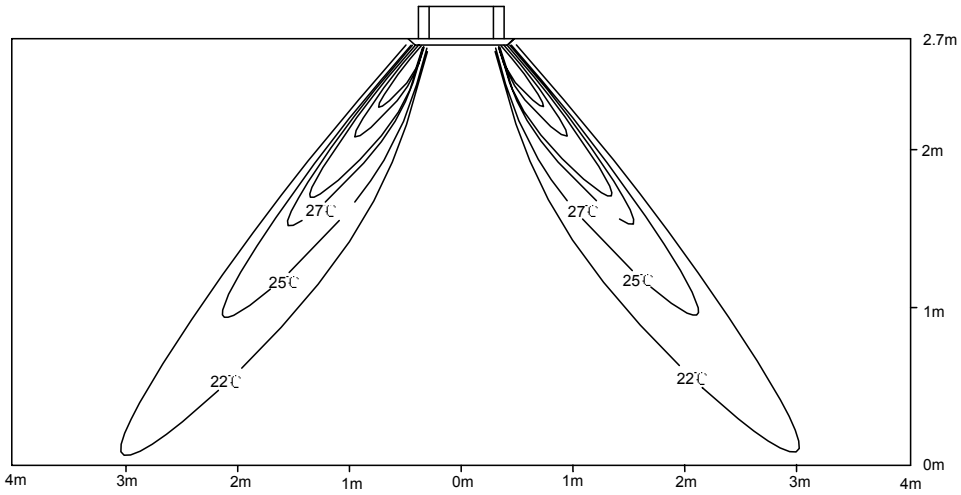

6.8 Sound pressure level

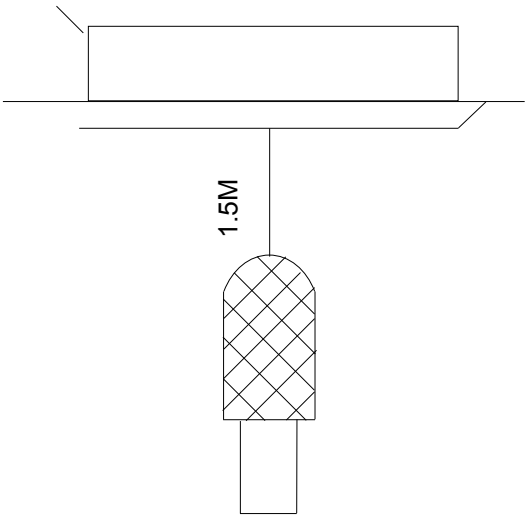

1) Testing illustrate:

2) Testing condition:
a: Unit running in the normal condition
b: Test in the semi-anechoic chamber
c: Noise level varies from the actual factors such as room structure, etc.

AB07/09/122MBERA

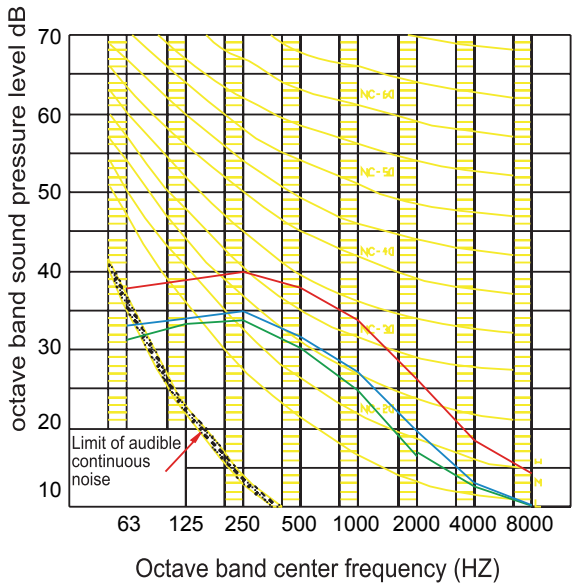

AB16/182MBERA

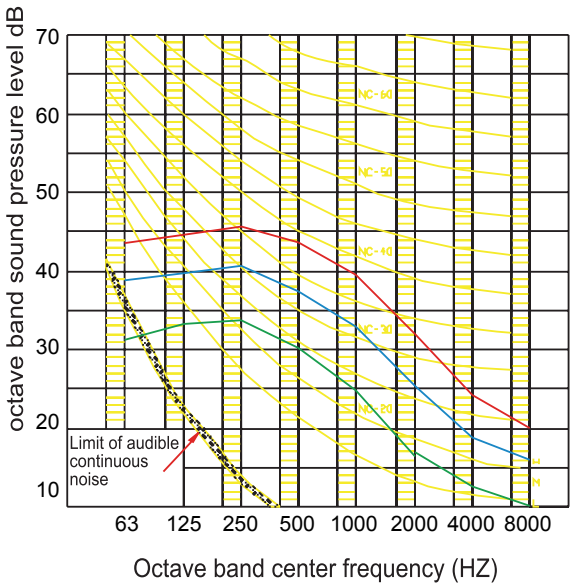

6.9 Installation

6.9.1 Installation procedures

Before installation
Make correct operation according to the manual when installation.
Please confirm the below information:
- If operation plan has been discussed
- Model, power supply specs
- Pipe, wire, and the other parts
- Accessories (inside the unit, take it out after opening the filter)

Selection of installation location for the indoor unit
Indoor units should be installed in places with the environment of even circulation of cool and warm blows. The following places should be avoided.
- Places with high salinity (beach), high sulfureted gas (such as the thermal spring regions where copper tubes and soft soldering are easy to be eroded), much oil (including mechanical oil) and steam; places where organic substance solvent is used; where special spray is frequently used;
- Places where machines generate the high frequency electromagnetic wave (abnormal condition will appear in the control system);
- Places where there are high humidity exists near the door or windows (dew is easily formed).

⚠ WARNING

Protect the machine from gales or earthquake, make the installation according to the regulations. Improper installation will cause accidents due to the overturn of the air conditioner.

Select the following places to install indoor unit
(1) The places where cool or warm air can ventilate smoothly. If the place is higher than 3m, the warm air will manifold around the ceiling. A circulator is necessary for this case.
(2) The places where the wires and pipes are easy to outdoor.
(3) The places where the condensate water can be drained out smoothly and the drainage pipe can lean appropriately.
(4) The places where there is no obstacle at air inlet or outlet. And the places which will not alarm or not be in short circuit.
(5) The place where the sunshine will not shoot directly.
(6) The places around which the frosting temperature is below 28℃ and the relative humidity is below 80% (when the unit is installed at place with high temperature, pay main attention to frosting issues, for example the unit can be equipped with heat insulation).
Take it into account that if the place is strong enough to support the unit. If not, please strengthen it with reinforced plate and horizontal plate.

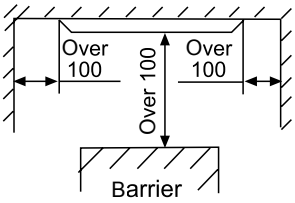

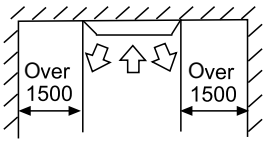

Suspension installation
Suspend the bolt with 4 M10 or W3/8. Fasten the bolt to make every bolt bear the load of 50kg. The suspension bolt should be about 95mm extending outward of ceiling.

When the ceiling exists already

1. Open a hole on the ceiling, and set the dimension appropriate for the installation.
2. Fasten the bolt (purchased locally) on the correct position.
3. After suspending indoor unit, install the template paper on the position of panel with 4 bolts, then adjust the height according to the below procedure. (The length from ceiling to unit bottom is AB072-182: 63mm)
4. Check if the unit is horizontal with a level. If not, the unit will leak water or float switch works badly.
5. Fix the unit after levelness adjustment.

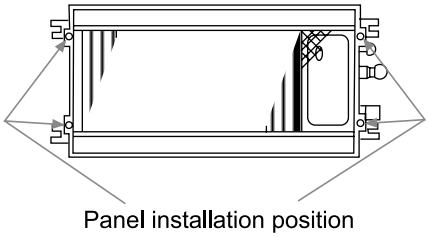

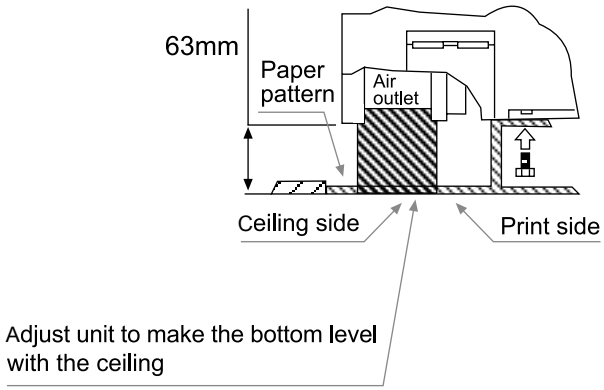

Install ceiling later

1. Install the unit block and template paper according to step 2-4.
2. Cut along external boundary line in the ceiling.
3. Fasten the unit after inspecting installation height and level.

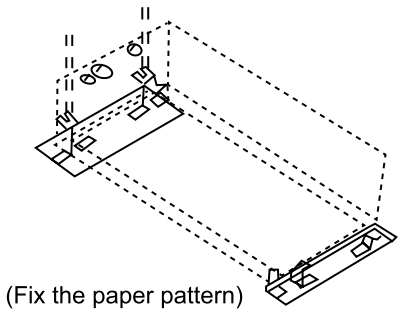

A	Gas pipe connector	
B	Liquid pipe connector	
C1	Drainage pipe connector	VP25
C2	Natural drainage outlet	VP20
D	Power inlet	
E	Suspension bolts	M10 or M3/8
F	Fresh air inlet	
G	Air supply branch pipe connector	

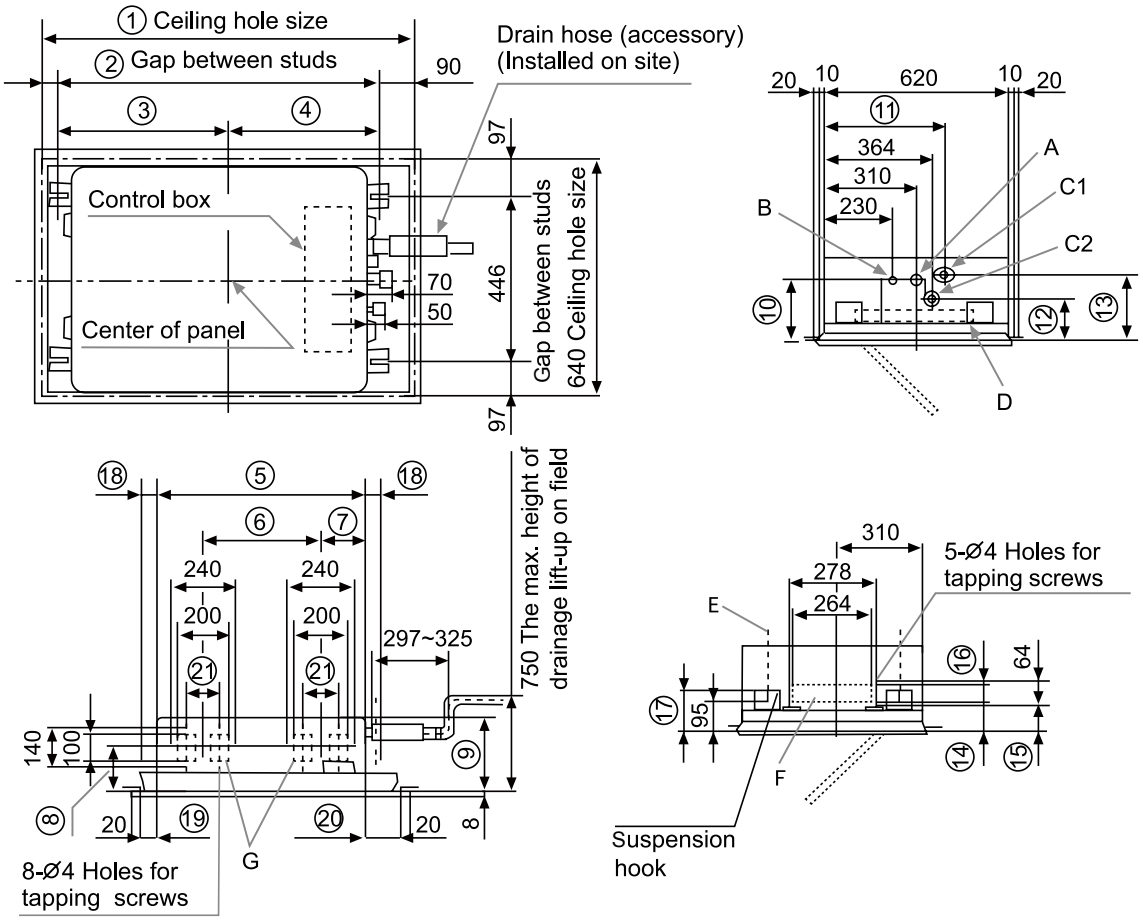

Model	①	②	③	④	⑤	⑥	⑦	⑧	⑨	⑩	⑪
AB072-182MBERA	1015	885	468	417	817	460	178	161	220	207	405

Model	⑫	⑬	⑭	⑮	⑯	⑰	⑱	⑲	⑳	㉑
AB072-182MBERA	148	227	98	91	47	120	56	74	124	130

Refrigerant pipe
Please refer to accompanied manual to know refrigerant pipe plumbing.

Gas side and liquid side should take measure of heat insulation.

Inspect if gas leaks, joints heat insulation materials have to be used to connect refrigerant piping extender mouth, then, use strap to tie two parts.

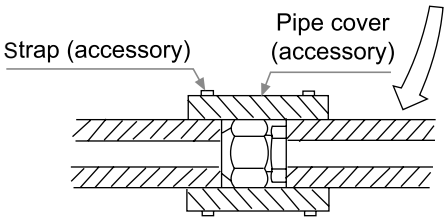

Drainage pipe

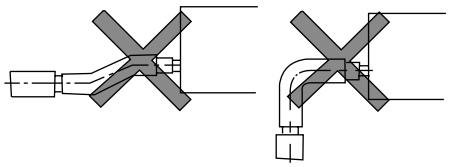

- Install attached flexible hose to adjust when installing panel. Bending or dragging intentionally will lead to leakage.
- Insert attached drainage flexible hose into fine mouth end of drainage, and then fix it with pipe clamp.
- Bind VP-25 joint (purchase in local place) to drainage flexible hose (Rigid PVC terminal) before suspending, then, bind VP-25 to this joint.
- Make sure binder does not flow into drainage pipe, otherwise, the pipe will be damaged after binder dries.

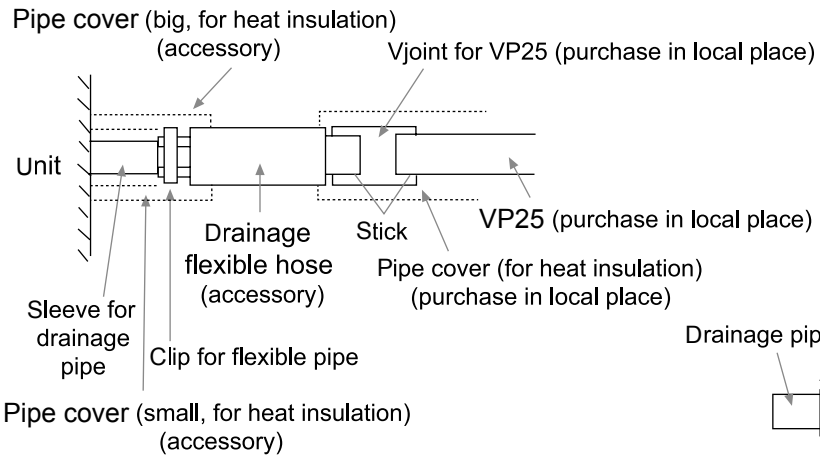

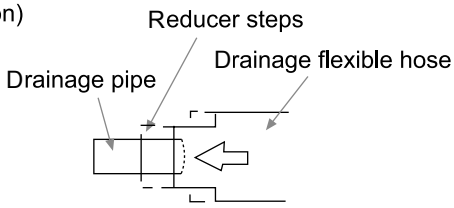

- Make drainage slope down (slope is 1/50-1/100), and any part of drainage upheaval or cave in.

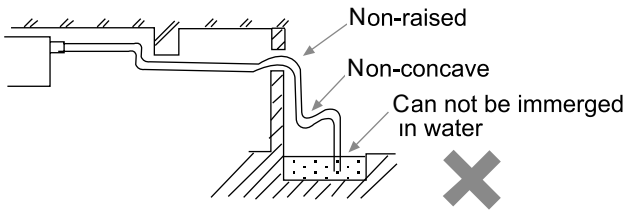

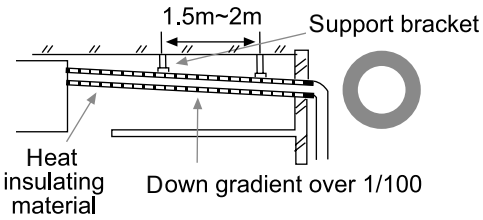

- Attention: make sure indoor unit side does not bear any pressure, and fix drainage near unit.
- Drainage can be normal rigid polyvinyl chloride pipe VP-25.
- When laying drainage pipe for multi units. As viewed in the picture, set main drainage 100mm under each indoor unit draining mouth, and the main pipe should be more than VP-30 thick plastic pipe.

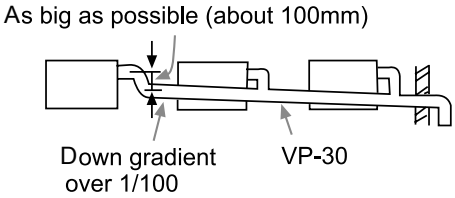

- Take insulation measures to the following two parts of drainage pipe to avoid leakage.
  Drain pipe fitting location:
  After drainage test, install small tube shield onto drain pipe fitting and then use bigger tube shield to cover smaller one and part of drainage pipe. And then use bandage to tie them.
  Rigid polyvinyl chloride pipe of indoor unit.
- Do not set air vent in the drain pipe.
- Exit height of drain pipe should be 750mm higher than ceiling, so if facing any barrier while laying drain pipe, you can use bending pipe or other attachments to avoid, and on this condition, if the drain pipe from unit to pipe is too long, the water flow will increase when air conditioner is off.

The following picture refers to particular location of match-fixing head of drain pipe.

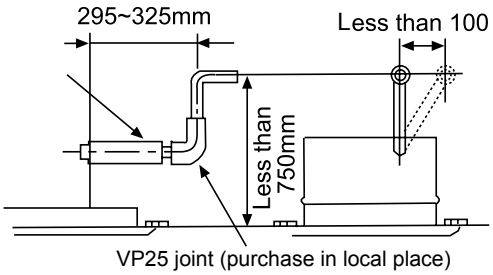

Other installation is the same as normal drain pipe working.

- Do not lay drain pipe at the place that can cause peculiar smell gas.
- Do not put drain pipe directly into sewer that can cause harmful gas.

In case of gravity drainage

- Remove the rubber plug and insulation from the gravity drainage port.
- Connect the drain hose (VP-20) using the gravity drainage connecting tube (option) and secure firmly with a clamp. (If the drain tube is directly connected with the gravity drainage port, the drain pan could not be removed.)
- Cut off drainage motor (blue 2P) (If the unit is used with this connector being connected, the drainage will go out through the standard drain connecting port, causing leaks.)

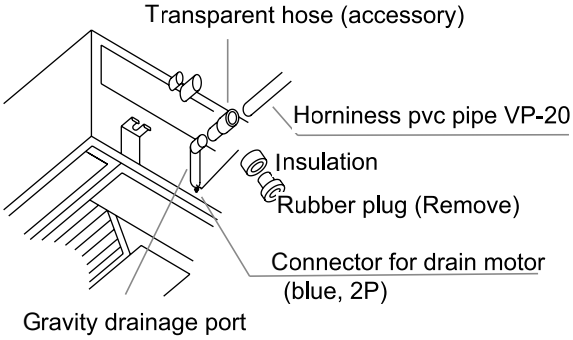

Drain test

- After installation of drain pipe, make sure that drain system work in good condition and no water leakage from joint and drain pan.
- Do drain test even if installation of heating season.
- For new building cases, make sure to complete the test before hanging the ceiling.

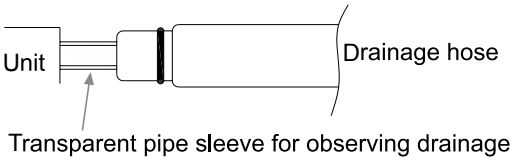

1. Pour water of about 1000cc into the drain pan in the indoor unit by pump so as not to get the electrical component wet.
2. At the drain socket (transparent), it is possible to check if the water is drained out properly. Confirm that the water is properly drained out while the drain motor is operating.
3. Unplug the drain plug on the indoor unit to remove remaining water after the test, and re-plug it.

Attention: *Do not make water splash.*

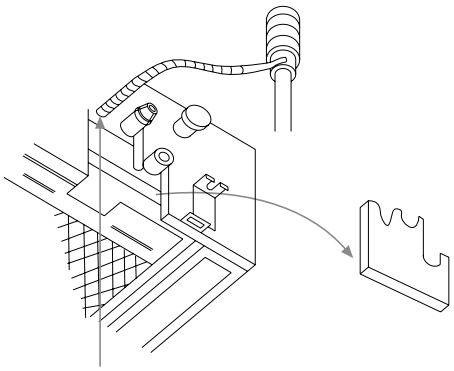

Insert the head of water supply pump into the hole beside the pump for about 50mm

Drain pump forceful running method

- Turn on indoor unit, drain pump will continuously run.
- Turn off after test is over. (If electrical work has not done, connect T style Y-shaped connector to form inlet, and then check if it leaks.)

Installation of pane

Bolt used should be close to panel

Air supply outlet is easy to be damaged, please pay attention to it when working.

1. Use drawing block to confirm the height of unit and size of ceiling. Remove it before installing panel, as well as air return panel.

Method to dismantle the air return panel

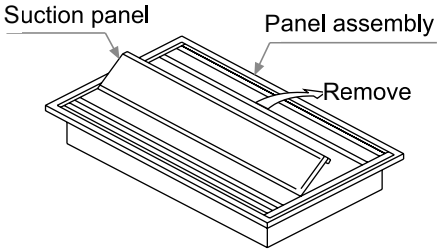

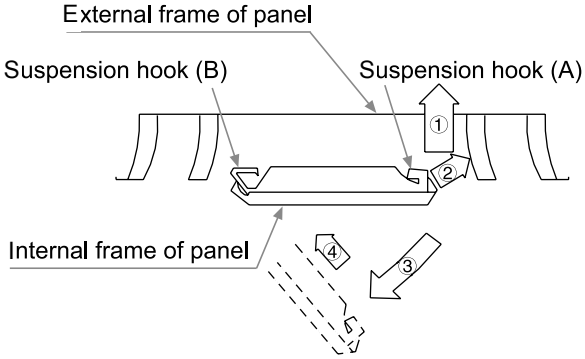

2. Screw 4 installation panels 5mm in unit panel.
3. Fix the panel.
4. Tighten the screws.
5. Link the joint of louver motor (white, 2P)(unit without louver automatically running function does not need this step.)

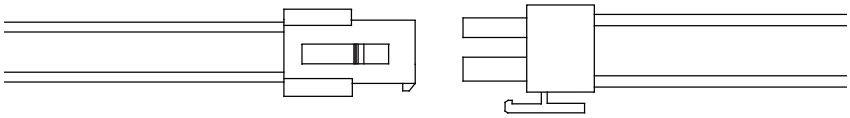

Control box terminal panel louver motor terminal

6. If you want to use the remote controller, you need to prepare an additional remote control receiver (RE-02), the ten pin white connector is for remote controller connect the port CN21 on PCB

CN21

7. Use remote control to make sure the connection is OK and then cut off the power for 10 seconds. restart.

Tubing Permissible Length & Height Difference

Please refer to the attached manual of outdoor units.

Tubing Materials & Specifications

Model		AB07/092MBERA	AB12/16/182MBERA
Tubing Size (mm)	Gas pipe	Φ9.52	Φ12.7
	Liquid pipe	Φ6.35	Φ6.35
Tubing Material	Phosphor deoxy bronze seamless pipe (TP2) for air conditioner		

Refrigerant Filling Amount

Add the refrigerant according to the installation instruction of outdoor unit. The addition of R410A refrigerant must be performed with a measure gage to ensure the specified amount while compressor failure can be caused by filling too much or little refrigerant.

Connecting Procedures of Refrigerant Tubing

Proceed the flare tube connecting operation to connect all the refrigerant tubes.

- Dual wrenches must be used in the connection of indoor unit tubing.
- Mounting torque refers to the right table

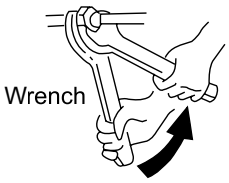

Outer diameter of tubing (mm)	Mounting torque (N.m)	Increase mounting torque (N.m)
Φ6.35	11.8 (1.2kgf.m)	13.7 (1.4kgf.m)
Φ9.52	24.5 (2.5kgf.m)	29.4 (3.0kgf.m)
Φ12.7	49.0 (5.0kgf.m)	53.9 (5.5kgf.m)
Φ15.88	78.4 (8.0kgf.m)	98.0 (10.0kgf.m)

Cutting and Enlarging

Cutting or enlarging pipes should be proceeded by installation personnel according to the operating criterion if the tube is too long or flare opening is broken.

Vacuumizing

Vacuumize from the stop valve of outdoor units with vacuum pump. Refrigerant sealed in indoor machine is not allowed to use for vacuumization.

Open All Valves

Open all the valves of outdoor units. [NB: oil balancing stop valve must be shut up completely when connected one master unit.]

Checkup for Air Leakage

Check if there is any leakage at the connecting part and bonnet with hydrophone or soapsuds.

Connecting

Connecting circular terminals:

1. Connecting circular terminals:
The connecting method of circular terminal is shown in the Fig. Take off the screw, connect it to the terminal tier after heading it through the ring at the end of the lead and then tighten it.
2. Connecting straight terminals:
The connection methods for the circular terminals are shown as follows: loosen the screw before putting the line terminal into the terminal tier, tighten the screw and confirm it has been clamped by pulling the line gently.
3. Pressing connecting line:
After connecting line is completed, press the connecting line with clips which should press on the protective sleeve of the connecting line.

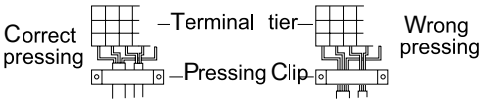

6.9.2 Electrical wiring

⚠ WARNING

- Electrical construction should be made with specific mains circuit by the qualified personnel according to the installation instruction. Electric shock and fire may be caused if the capacity of power supply is not sufficient.
- During arranging the wiring layout, specified cables should be used as the mains line, which accords with the local regulations on wiring. Connecting and fastening should be performed reliably to avoid the external force of cables from transmitting to the terminals. Improper connection or fastness may lead to burning or fire accidents.
- There must be the ground connection according to the criterion. Unreliable grounding may cause electrical shocks. Do not connect the grounding line to the gas pipe, water pipe, lightening rod and telephone line.

⚠ ATTENTION

- Only copper wire can be used. Breaker for electric leakage should be provided, or electric shock may occur.
- The wiring of the mains line is of Y type. The power plug L should be connected to the live wire and plug N connected to null wire while ⏚ should be connected to the ground wire. For the type with auxiliary electrically heating function, the live wire and the null wire should not be misconnected, or the surface of electrical heating body will be electrified. If the power line is damaged, replace it by the professional personnel of the manufacturer or service center.
- The power line of indoor units should be arranged according to the installation instruction of indoor units.
- The electrical wiring should be out of contact with the high-temperature sections of tubing as to avoid melting the insulating layer of cables, which may cause accidents.
- After connected to the terminal tier, the tubing should be curved into be a U-type elbow and fastened with the pressing clip.
- Controller wiring and refrigerant tubing can be arranged and fixed together.
- The machine can't be powered on before electrical operation. Maintenance should be done while the power is shut down.
- Seal the thread hole with heat insulating materials to avoid condensation.
- Signal line and power line are separately independent, which can't share one line. [Note: the power line and signal line are provided by users. Parameters for power lines are shown as below: 3×1.0-1.5) mm^2; parameters for signal line: 2×0.75-1.25)mm^2(shielded line)]
- 5 butt lines (1.5mm) are equipped in the machine before delivery, which are used in connection between the valve box and the electrical system of the machine. The detailed connection is displayed in the circuit diagram.

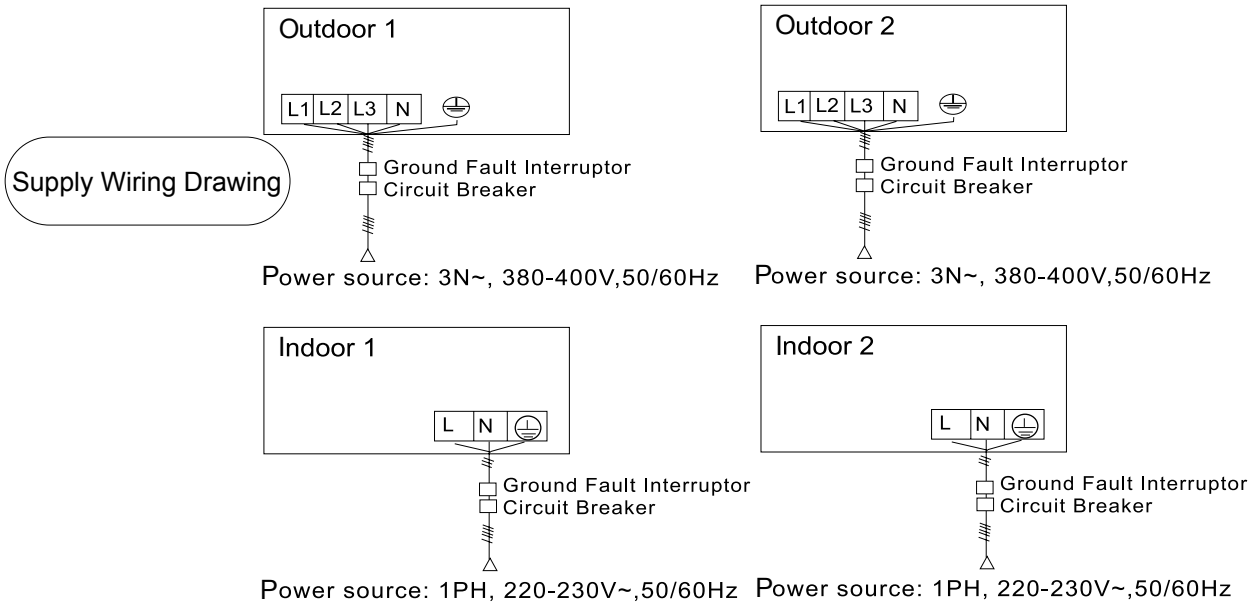

- Indoor units and outdoor units should be connected to the power source separately. Indoor units must share one single electrical source, but its capacity and specifications should be calculated. Indoor & outdoor units should be equipped with the power leakage breaker and the overflow breaker.

Signal Wiring Drawing

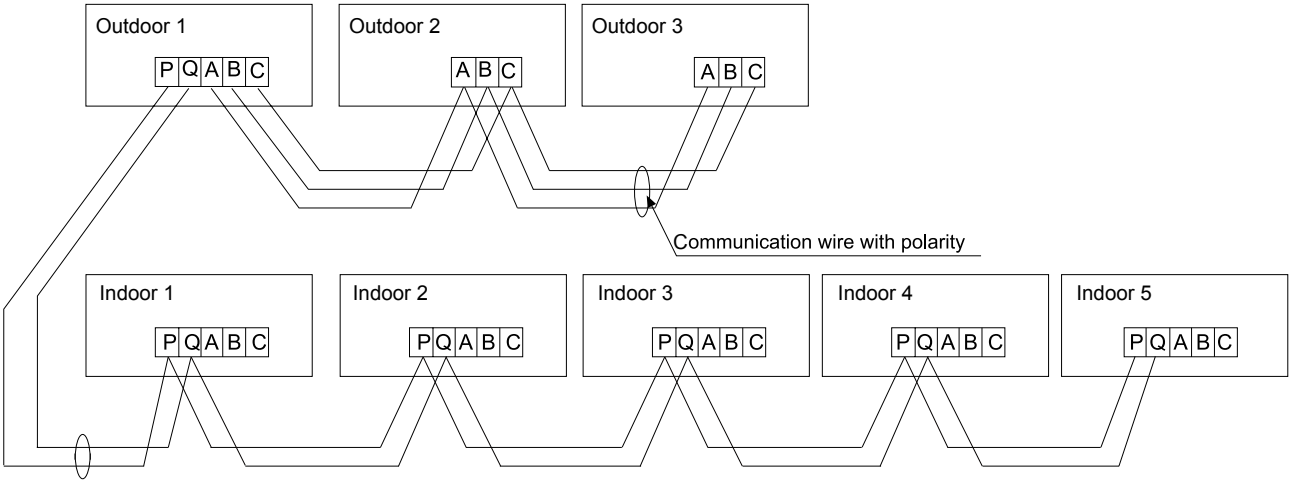

Outdoor units are of parallel connection via three lines with polarity. The master unit, central control and all indoor units are of parallel connection via two lines without polarity. The singal line between wired controller and indoor units are polarity

There are three connecting ways between wired controller and indoor units:

A. One wired controller controls one indoor unit, the wired controller connects with the ABC terminal of indoor unit.

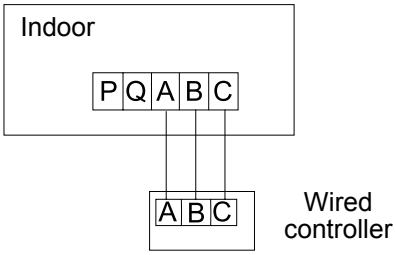

B. Two wired controllers control one indoor unit. Either of the wired controls can be set to be the master wired controller while the other is set to be the slave wired controller.

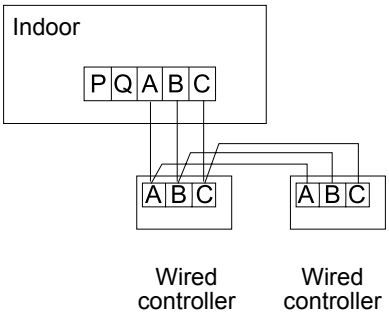

Master and slave controller setting method for YR-E17, other controllers' setting method please refer to the controller manual

No.	Type	State of switch	Function description
SW1-1	Select the master or the slave controller	ON	Slave controller
		OFF	Master controller

C. One wired controller controls multiple units

0151800161B PCB

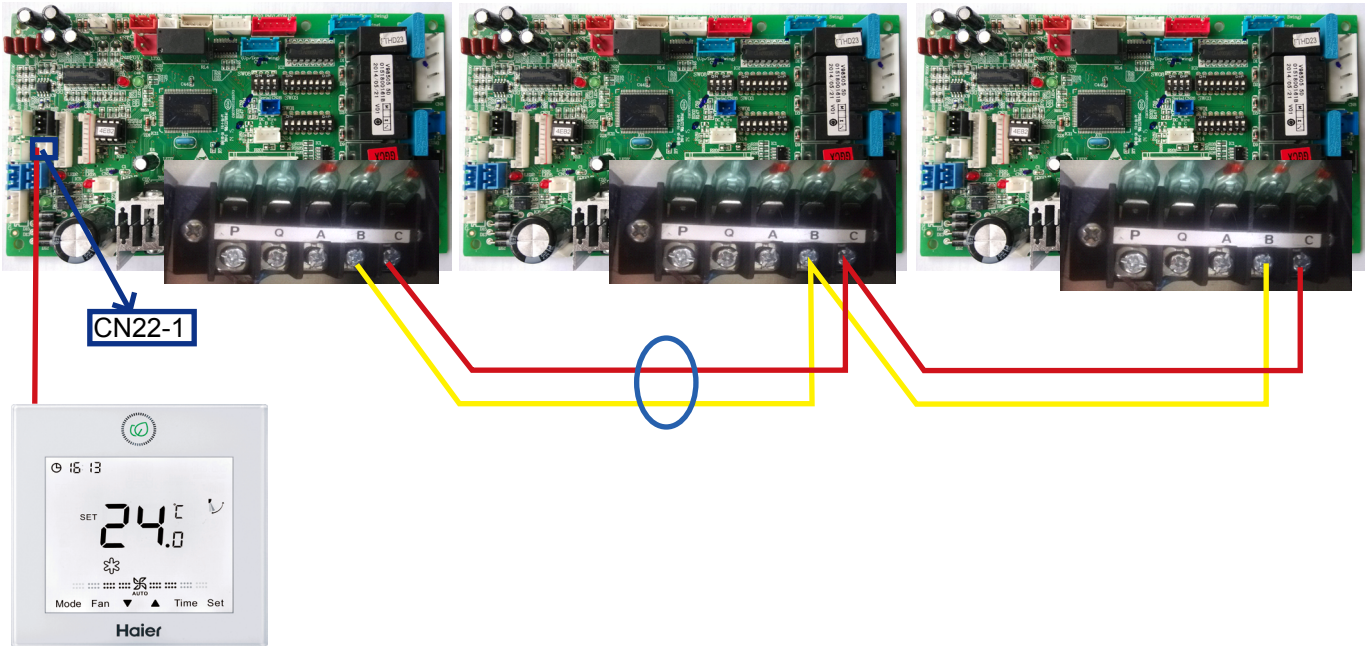

Note:

1. Plug the wired controller terminal to the CN22-1 terminal of master unit which wired address is 0, the slave unit only connects BC terminal.
2. Wired address setting

SW01-2~ SW01-4	Wired control address	**OFF**	**OFF**	**OFF**	0# master unit (default)
		OFF	OFF	ON	1# slave unit
		OFF	ON	OFF	2# slave unit
		OFF	ON	ON	3# slave unit
		ON	OFF	OFF	4# slave unit
		ON	OFF	ON	5# slave unit
		ON	ON	OFF	6# slave unit
		ON	ON	ON	7# slave unit

3. One controller can Max. control 8 indoor units.
4. Hand-in-hand connection method
5. The singal line is polarity

The combination of multiple indoor units can be controlled by wired controller or remote controller.
※ Switching mode of Wired control master unit/ Wired control slave unit/ remote control types can be used for switching over ※

Setting mode / Socket/dip switch	Wired control master unit	Wired control slave unit	Remote control
SW01-[2][3][4]	All OFF	[0][0][1]	All OFF
CN21 socket	Null	Null	Connect to remote receiver
Terminal block (control)	A,B,C connect with wired controller	B,C connect with wired controller	A,B,C null

Note:

The wiring for the power line of indoor unit, the wiring between indoor and outdoor units as well as the wiring between indoor units:

Items / Total current of indoor units (A)	Cross section (mm^2)	Length (m)	Rated current of overflow breaker (A)	Rated current of residual circuit breaker (A) Ground fault Interrupter (mA) Response time (S)	Cross sectional area of signal Line	
					Outdoor -indoor (mm^2)	Indoor -indoor (mm^2)
<7	2.5	20	10	10 A, 30 mA, 0.1S or below	2 cores×(0.75-2.0) mm^2 shielded line	
≥7 and <11	4	20	16	16 A, 30 mA, 0.1S or below		
≥11 and <16	6	25	20	20 A, 30 mA, 0.1S or below		
≥16 and <22	8	30	32	32 A, 30 mA, 0.1S or below		
≥22 and <27	10	40	32	32 A, 30 mA, 0.1S or below		

※ The electrical power line and signal lines must be fastened tightly.
※ Every indoor unit must have the ground connection.
※ The power line should be enlarged if it exceeds the permissible length.
※ Shielded lays of all the indoor and outdoor units should be connected together, with the shielded lay at the side of signal lines of outdoor units grounded at one point.
※ It is not permissible if the whole length of signal line exceeds 1000m.

Signal wiring of wired controller

Length of signal line (m)	Wiring dimensions
≤ 250	0.75mm^2×3 core shielded line

※ The shielding lay of the signal line must be grounded at one end.
※ The total length of the signal line shall not be more than 250m.

6.9.3 Test run

Before Test Run

- Before switching it on, test the supply terminal tier (L, N terminals) and grounding points with 500V megaohm meter and check if the resistance is above 1MΩ. It can't be operated if it is below 1MΩ.
- Connect it to the power supply of outdoor units to energize the heating belt of the compressor. To protect the compressor at startup, power it on 12 hours prior to the operation.
- Check if the arrangements of the drainpipe and connection line are correct.
- The drainpipe shall be placed at the lower part while the connection line placed at the upper part.
- Heat preservation measures should be taken such as winding the drainpipe esp. in the indoor units with heating insulating materials.
- The drain pipe should be made a slope type to avoid protruding at the upper part and concaving at the lower part on the way.
- Checkup of Installation.

- ☐ Check if the mains voltage is matching
- ☐ Check if there is air leakage at the piping joints
- ☐ Check if the connections of mains power and indoor & outdoor units are correct
- ☐ Check if the serial numbers of terminals are matching
- ☐ Check if the installation place meets the requirement
- ☐ Check if there is too much noise
- ☐ Check if the connecting line is fastened
- ☐ Check if the connectors for tubing are heat insulated
- ☐ Check if the water is drained to the outside
- ☐ Check if the indoor units are positioned

Ways of Test Run

Do ask the installation personnel to make a test run. Take the testing procedures according to the manual and check if the temperature regulator works properly.
When the machine fails to start due to the room temperature, the following procedures can be taken to do the compulsive running. The function is not provided for the type with remote control.

- Set the wired controller to cooling/heating mode, press "ON/ OFF" button for 5 seconds to enter into the compulsive cooling/heating mode. Repress "ON/ OFF" button to quit the compulsive running and stop the operation of the air conditioner.