16. Medium ESP Duct Type Indoor Unit (AD*MJERAB)

16.1 Feature

- 5-28K
- Only 248mm thick
- Built-in drain pump
- 50/100Pa

16.2 Specification

MODEL			AD052MJERAB	AD072MJERAB
Power supply		Ph-V-Hz	1/220~240/50/60	1/220~240/50/60
Cooling	Capacity	kBtu/h	5.1	7.5
	Capacity	kW	1.5	2.2
	Power Input	W	105	105
	Current	A	0.5	0.5
Heating	Capacity	kBtu/h	5.8	8.5
	Capacity	kW	1.7	2.5
	Power Input	W	105	105
	Current	A	0.5	0.5
	Heating capacity at low temp.	kW	1.42	2.08
Operating current		A	0.5	0.5
Power consumption		kW	105	105
INDOOR MOTOR	Brand		Tongdeli	Tongdeli
	Model		YDK52-4A	YDK52-4A
	Type		AC	AC
	Insulation Class		B	B
	IP Class		20	20
	Power Input	W	105	105
	Power output	W	52	52
	Capacitor	μF	/	/
	Speed (High/Middle/Low)	rpm	1150/920/750/610	1150/920/750/610
INDOOR FAN	Brand		Haier	Haier
	Type		Cross	Cross
	Quantity		1	1
INDOOR COIL	a. Number of rows		2	2
	b. Tube pitch(a)x row pitch(b)	mm	13.3	13.3
	c. Fin spacing	mm	1.4	1.4
	d. Fin type (code)		Hydrophilic aluminum	Hydrophilic aluminum
	e. Tube outside dia. and type	mm	Φ7 Inner groove tube	Φ7 Inner groove tube
	f. Coil length x height x width	mm	465 x336 x 26.6	465 x336 x 26.6
	g. Number of circuits		4	4

MODEL			AD052MJERAB	AD072MJERAB
Cabinet	Cabinet Coating Type		Galvanized	Galvanized
	Cabinet Salt Spray Test Duration	Hour	48	48
	Control Box IP Class		IP20	IP20
Construction	Sheet Metal Thickness		0.8	0.8
	Drain Pan Material		EPS	EPS
	Drain Pan Insulation		HF-1	HF-1
	Drain Pump Option	mm	Standard 700mm	Standard 700mm
	Branch Outlet Option		NO	NO
Indoor Wall	Material		Hot zinc plate	Hot zinc plate
	Thickness	mm	0.8	0.8
	Double or Single Skin		Single	Single
Air Filter	Material		PP	PP
	Mesh		100	100
	Pressure Drop	Pa	5	5
Piping dimension	Liquid pipe	mm	6.35	6.35
	Gas pipe	mm	9.52	9.52
	Drain hose	mm	25	25
Fresh air dimension		mm	123	123
Sound pressure level (H/M/L)		dB(A)	35/33/31	35/33/31
Sound power level (H/M/L)		dB(A)	39/37/35	39/37/35
Standard static pressure		Pa	50	50
Max. static pressure		Pa	100	100
Indoor air flow (H/M/L)		m^3/h	630/510/424	630/510/424
Air outlet dimensions		mm	592*165	592*165
Air return dimensions		mm	578*238	578*238
Dimension (W*H*D)		mm	700/700/248	700/700/248
Packing (W*H*D)		mm	932/835/280	932/835/280
Net weight		kg	27	27
Gross weight		kg	32	32

Nominal condition: indoor temperature (cooling): 27DB (°C)/19WB (°C), indoor temperature (heating): 20DB (°C)
Outdoor temperature (cooling): 35DB (°C)/24WB (°C), outdoor temperature (heating): 7DB (°C)/6WB (°C)
The noise level will be measured in the third octave band limited values, using a Real Time Analyser calibrated sound intensity meter. It is a sound pressure noise level.

MODEL			AD092MJERAB	AD122MJERAB
Power supply		Ph-V-Hz	1/220~240/50/60	1/220~240/50/60
Cooling	Capacity	kBtu/h	9.5	12.3
	Capacity	kW	2.8	3.6
	Power Input	W	105	105
	Current	A	0.5	0.5
Heating	Capacity	kBtu/h	10.9	13.6
	Capacity	kW	3.2	4
	Power Input	W	105	105
	Current	A	0.5	0.5
	Heating capacity at low temp.	kW	2.67	3.33
Operating current		A	0.5	0.5
Power consumption		kW	105	105
INDOOR MOTOR	Brand		Tongdeli	Tongdeli
	Model		YDK52-4A	YDK52-4A
	Type		AC	AC
	Insulation Class		B	B
	IP Class		20	20
	Power Input	W	105	105
	Power output	W	52	52
	Capacitor	μF	/	/
	Speed (High/Middle/Low)	rpm	1150/920/750/610	1150/920/750/610
INDOOR FAN	Brand		Haier	Haier
	Type		Cross	Cross
	Quantity		1	1
INDOOR COIL	a. Number of rows		2	2
	b. Tube pitch(a)x row pitch(b)	mm	13.3	13.3
	c. Fin spacing	mm	1.4	1.4
	d. Fin type (code)		Hydrophilic aluminum	Hydrophilic aluminum
	e. Tube outside dia. and type	mm	Φ7 Inner groove tube	Φ7 Inner groove tube
	f. Coil length x height x width	mm	465 x336 x 26.6	465 x336 x 26.6
	g. Number of circuits		4	4

MODEL			AD092MJERAB	AD122MJERAB
Cabinet	Cabinet Coating Type		Galvanized	Galvanized
	Cabinet Salt Spray Test Duration	Hour	48	48
	Control Box IP Class		IP20	IP20
Construction	Sheet Metal Thickness		0.8	0.8
	Drain Pan Material		EPS	EPS
	Drain Pan Insulation		HF-1	HF-1
	Drain Pump Option	mm	Standard 700mm	Standard 700mm
	Branch Outlet Option		NO	NO
Indoor Wall	Material		Hot zinc plate	Hot zinc plate
	Thickness	mm	0.8	0.8
	Double or Single Skin		Single	Single
Air Filter	Material		PP	PP
	Mesh		100	100
	Pressure Drop	Pa	5	5
Piping dimension	Liquid pipe	mm	6.35	6.35
	Gas pipe	mm	9.52	12.7
	Drain hose	mm	25	25
Fresh air dimension		mm	123	123
Sound pressure level (H/M/L)		dB(A)	35/33/31	35/33/31
Sound power level (H/M/L)		dB(A)	39/37/35	39/37/35
Standard static pressure		Pa	50	50
Max. static pressure		Pa	100	100
Indoor air flow (H/M/L)		m^3/h	630/510/424	630/510/424
Air outlet dimensions		mm	592*165	592*165
Air return dimensions		mm	578*238	578*238
Dimension (W*H*D)		mm	700/700/248	700/700/248
Packing (W*H*D)		mm	932/835/280	932/835/280
Net weight		kg	27	27
Gross weight		kg	32	32

Nominal condition: indoor temperature (cooling): 27DB (°C)/19WB (°C), indoor temperature (heating): 20DB (°C)
Outdoor temperature (cooling): 35DB (°C)/24WB (°C), outdoor temperature (heating): 7DB (°C)/6WB (°C)
The noise level will be measured in the third octave band limited values, using a Real Time Analyser calibrated sound intensity meter. It is a sound pressure noise level.

MODEL			AD162MJERAB	AD182MJERAB
Power supply		Ph-V-Hz	1/220~240/50/60	1/220~240/50/60
Cooling	Capacity	kBtu/h	15.3	19.1
	Capacity	kW	4.5	5.6
	Power Input	W	125	137
	Current	A	0.6	0.66
Heating	Capacity	kBtu/h	17.1	21.5
	Capacity	kW	5	6.3
	Power Input	W	125	137
	Current	A	0.6	0.66
	Heating capacity at low temp.	kW	4.17	5.25
Operating current		A	0.6	0.66
Power consumption		kW	125	137
INDOOR MOTOR	Brand		Tongdeli	Tongdeli
	Model		YDK72-4A	YSK80-4K
	Type		AC	AC
	Insulation Class		B	B
	IP Class		20	20
	Power Input	W	125	137
	Power output	W	72	80
	Capacitor	μF	/	/
	Speed (High/Middle/Low)	rpm	1245/1050/860/690	1100/890/760/630
INDOOR FAN	Brand		Haier	Haier
	Type		Cross	Cross
	Quantity		1	2
INDOOR COIL	a. Number of rows		3	2
	b. Tube pitch(a)x row pitch(b)	mm	13.3	13.3
	c. Fin spacing	mm	1.4	1.4
	d. Fin type (code)		Hydrophilic aluminum	Hydrophilic aluminum
	e. Tube outside dia. and type	mm	Φ7 Inner groove tube	Φ7 Inner groove tube
	f. Coil length x height x width	mm	465 x336 x 39.9	865 x336 x 26.6
	g. Number of circuits		6	4

MODEL			AD162MJERAB	AD182MJERAB
Cabinet	Cabinet Coating Type		Galvanized	Galvanized
	Cabinet Salt Spray Test Duration	Hour	48	48
	Control Box IP Class		IP20	IP20
Construction	Sheet Metal Thickness		0.8	0.8
	Drain Pan Material		EPS	EPS
	Drain Pan Insulation		HF-1	HF-1
	Drain Pump Option	mm	Standard 700mm	Standard 700mm
	Branch Outlet Option		NO	NO
Indoor Wall	Material		Hot zinc plate	Hot zinc plate
	Thickness	mm	0.8	0.8
	Double or Single Skin		Single	Single
Air Filter	Material		PP	PP
	Mesh		100	100
	Pressure Drop	Pa	5	5
Piping dimension	Liquid pipe	mm	6.35	6.35
	Gas pipe	mm	12.7	12.7
	Drain hose	mm	25	25
Fresh air dimension		mm	123	123
Sound pressure level (H/M/L)		dB(A)	35/33/31	36/34/32
Sound power level (H/M/L)		dB(A)	39/37/35	40/38/36
Standard static pressure		Pa	50	50
Max. static pressure		Pa	100	100
Indoor air flow (H/M/L)		m^3/h	740/550/442	980/840/760
Air outlet dimensions		mm	592*165	992*165
Air return dimensions		mm	578*238	978*238
Dimension (W*H*D)		mm	700/700/248	1100/700/248
Packing (W*H*D)		mm	932/835/280	1332/835/280
Net weight		kg	28.5	36.8
Gross weight		kg	33.5	43.4

Nominal condition: indoor temperature (cooling): 27DB (°C)/19WB (°C), indoor temperature (heating): 20DB (°C)
Outdoor temperature (cooling): 35DB (°C)/24WB (°C), outdoor temperature (heating): 7DB (°C)/6WB (°C)
The noise level will be measured in the third octave band limited values, using a Real Time Analyser calibrated sound intensity meter. It is a sound pressure noise level.

MODEL			AD242MJERAB	AD282MJERAB
Power supply		Ph-V-Hz	1/220~240/50/60	1/220~240/50/60
Cooling	Capacity	kBtu/h	24.2	27.3
	Capacity	kW	7.1	8
	Power Input	W	190	190
	Current	A	0.9	0.9
Heating	Capacity	kBtu/h	27.3	30.7
	Capacity	kW	8	9
	Power Input	W	190	190
	Current	A	0.9	0.9
	Heating capacity at low temp.	kW	6.67	7.50
Operating current		A	0.9	0.9
Power consumption		kW	190	190
INDOOR MOTOR	Brand		Tongdeli	Tongdeli
	Model		YSK110-4A	YSK110-4A
	Type		AC	AC
	Insulation Class		B	B
	IP Class		20	20
	Power Input	W	190	190
	Power output	W	110	110
	Capacitor	μF	6	6
	Speed (High/Middle/Low)	rpm	1165/960/840/710	1165/960/840/710
INDOOR FAN	Brand		Haier	Haier
	Type		Cross	Cross
	Quantity		2	2
INDOOR COIL	a. Number of rows		2	2
	b. Tube pitch(a)x row pitch(b)	mm	13.3	13.3
	c. Fin spacing	mm	1.4	1.4
	d. Fin type (code)		Hydrophilic aluminum	Hydrophilic aluminum
	e. Tube outside dia. and type	mm	Φ7 Inner groove tube	Φ7 Inner groove tube
	f. Coil length x height x width	mm	865 x336 x 26.6	865 x336 x 26.6
	g. Number of circuits		4	4

MODEL			AD242MJERAB	AD282MJERAB
Cabinet	Cabinet Coating Type		Galvanized	Galvanized
	Cabinet Salt Spray Test Duration	Hour	48	48
	Control Box IP Class		IP20	IP20
Construction	Sheet Metal Thickness		0.8	0.8
	Drain Pan Material		EPS	EPS
	Drain Pan Insulation		HF-1	HF-1
	Drain Pump Option	mm	Standard 700mm	Standard 700mm
	Branch Outlet Option		NO	NO
Indoor Wall	Material		Hot zinc plate	Hot zinc plate
	Thickness	mm	0.8	0.8
	Double or Single Skin		Single	Single
Air Filter	Material		PP	PP
	Mesh		100	100
	Pressure Drop	Pa	5	5
Piping dimension	Liquid pipe	mm	9.52	9.52
	Gas pipe	mm	15.88	15.88
	Drain hose	mm	25	25
Fresh air dimension		mm	123	123
Sound pressure level (H/M/L)		dB(A)	40/37/34	42/38/34
Sound power level (H/M/L)		dB(A)	44/41/38	46/42/38
Standard static pressure		Pa	50	50
Max. static pressure		Pa	100	100
Indoor air flow (H/M/L)		m^3/h	1174/1080/960	1174/1080/960
Air outlet dimensions		mm	992*165	992*165
Air return dimensions		mm	978*238	978*238
Dimension (W*H*D)		mm	1100/700/248	1100/700/248
Packing (W*H*D)		mm	1332/835/280	1332/835/280
Net weight		kg	37	37
Gross weight		kg	43.6	43.6

Nominal condition: indoor temperature (cooling): 27DB (°C)/19WB (°C), indoor temperature (heating): 20DB (°C)
Outdoor temperature (cooling): 35DB (°C)/24WB (°C), outdoor temperature (heating): 7DB (°C)/6WB (°C)
The noise level will be measured in the third octave band limited values, using a Real Time Analyser calibrated sound intensity meter. It is a sound pressure noise level.

16.3 Dimension

16.3.1 AD05-162MJERAB dimension

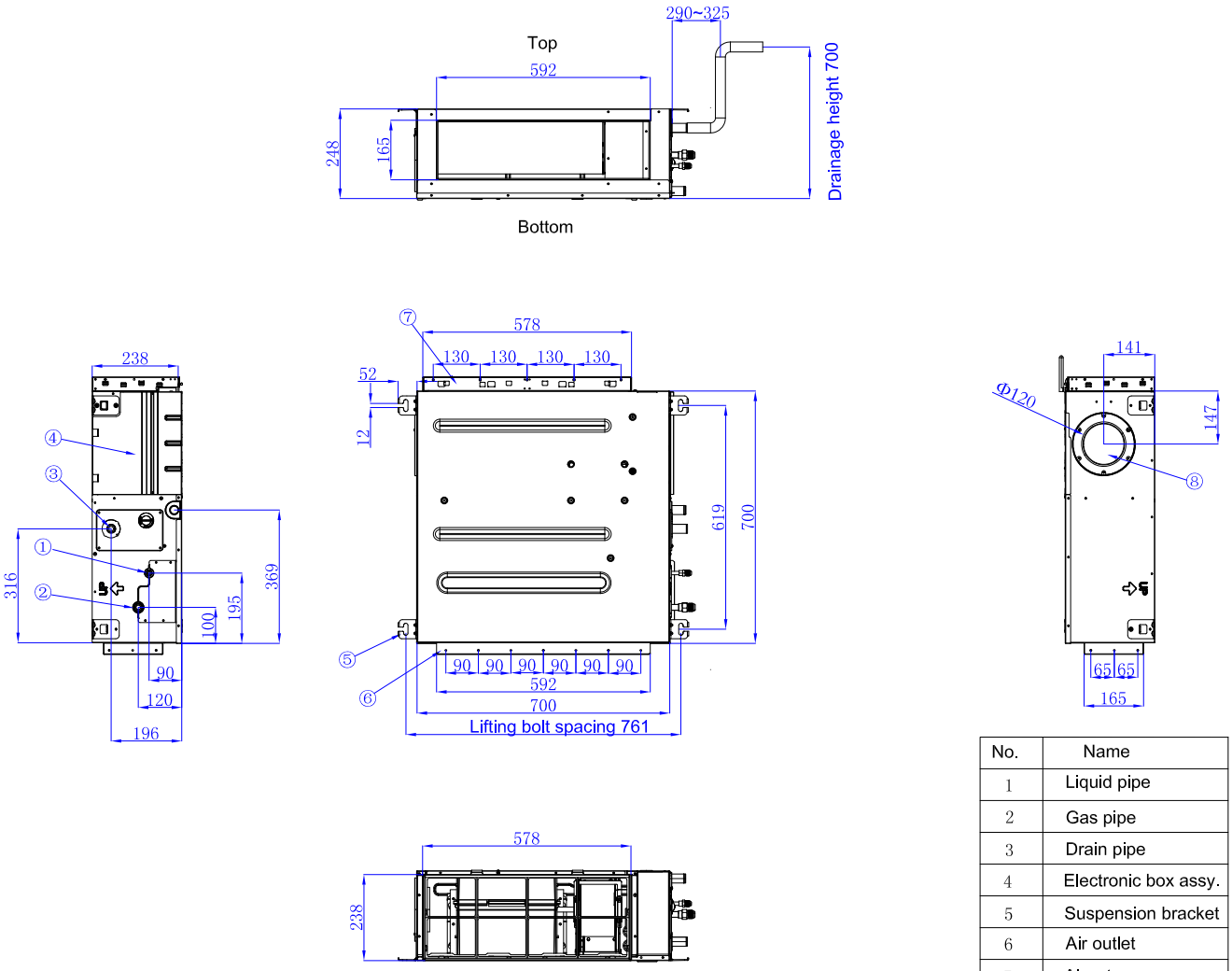

No.	Name
1	Liquid pipe
2	Gas pipe
3	Drain pipe
4	Electronic box assy.
5	Suspension bracket
6	Air outlet
7	Air return
8	Fresh air

16.3.2 AD18-282MJERAB dimension

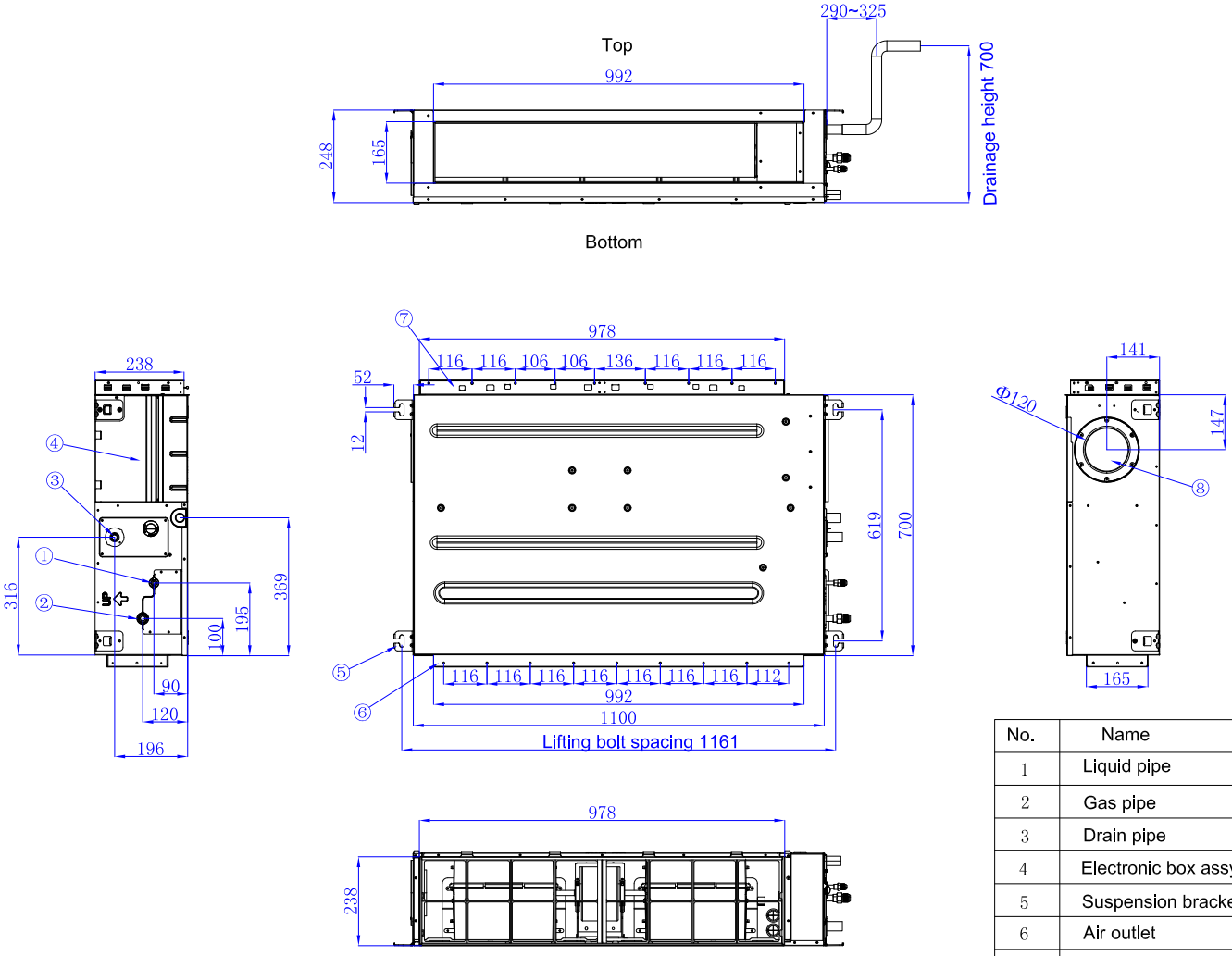

No.	Name
1	Liquid pipe
2	Gas pipe
3	Drain pipe
4	Electronic box assy.
5	Suspension bracket
6	Air outlet
7	Air return
8	Fresh air

16.4 Piping diagram

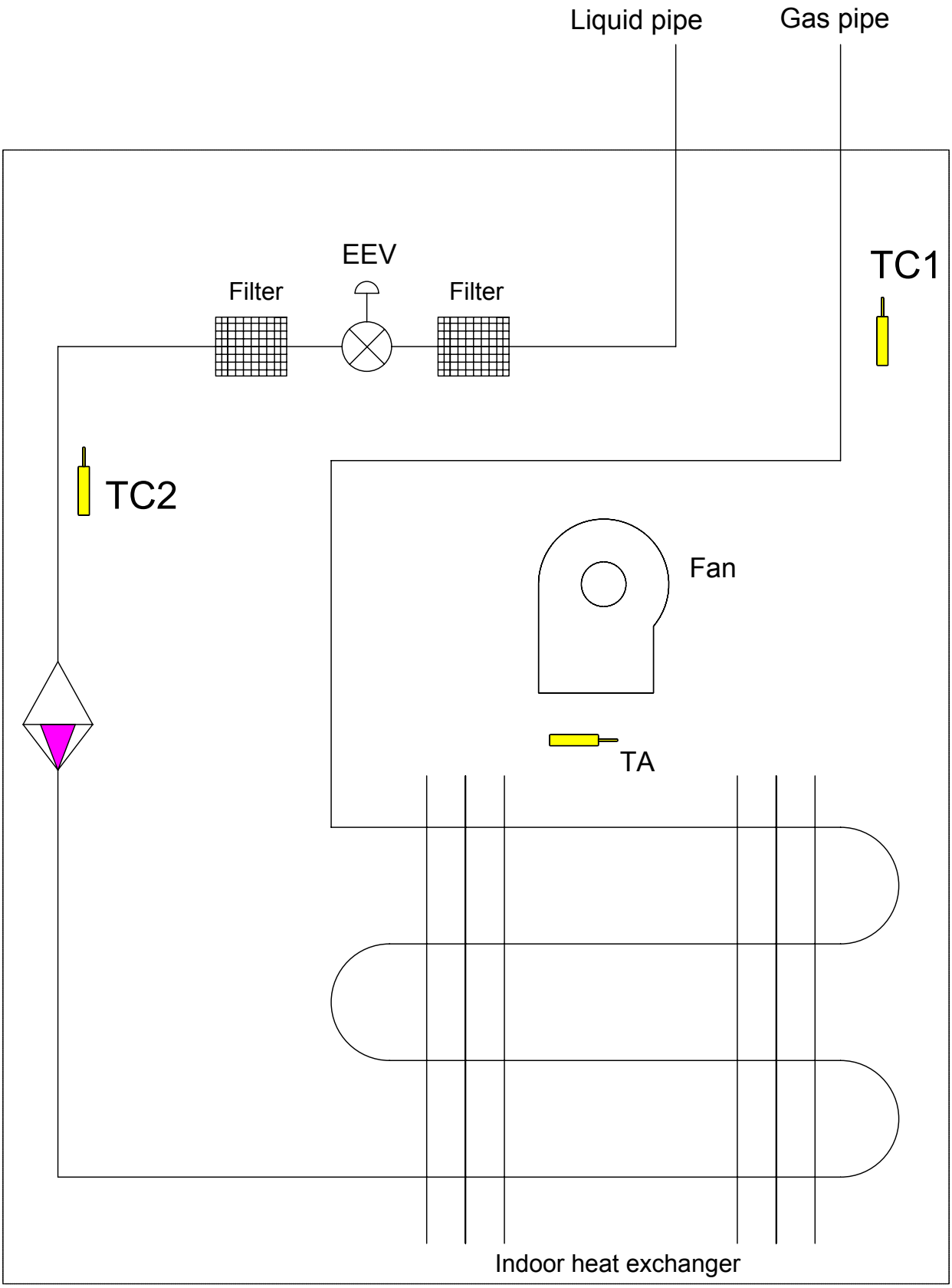

16.5 Wiring diagram

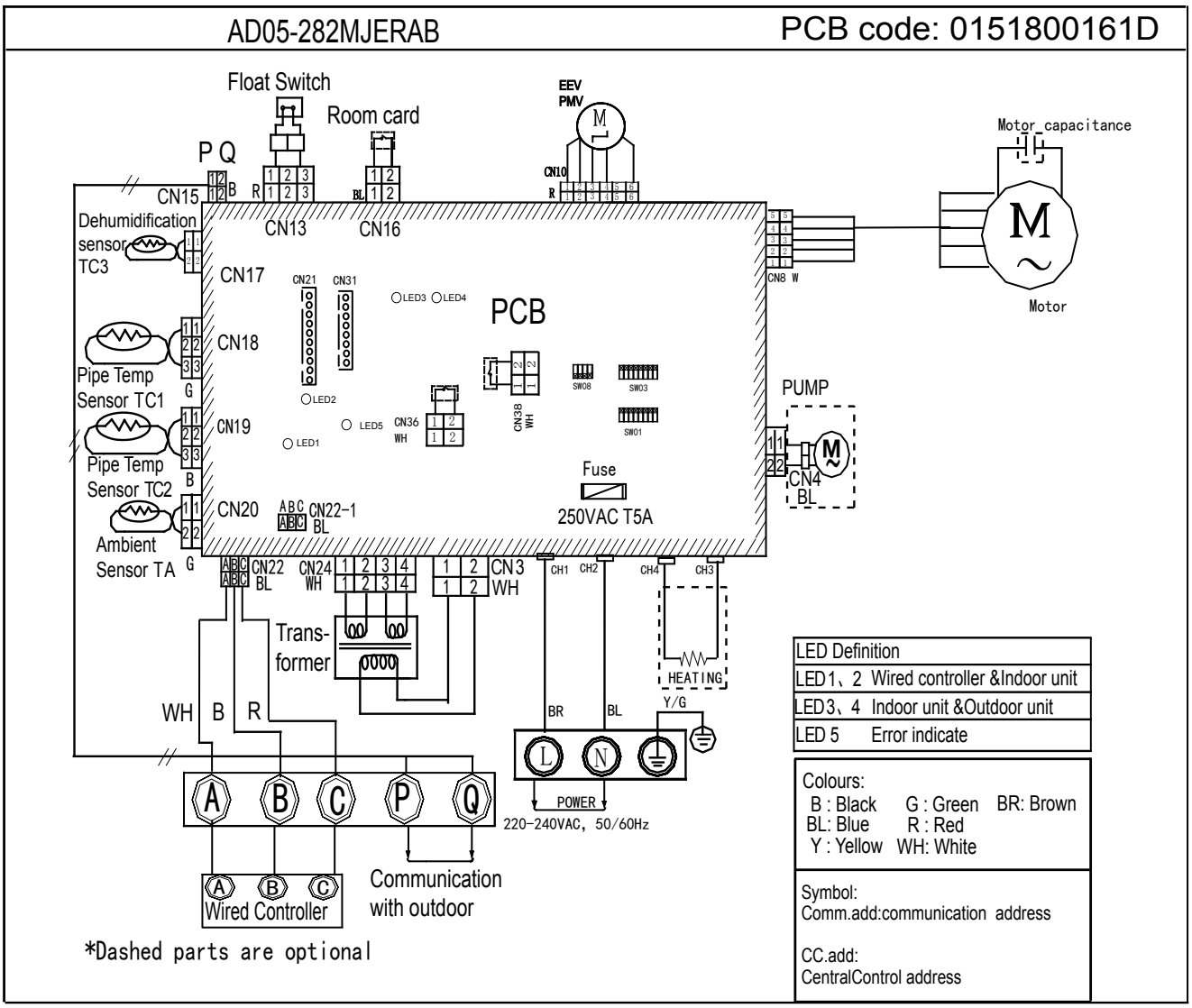

16.6 Electric characteristics

Units					Power supply		Indoor fan motor		Power input (W)	
Model	Phase	FQY	Voltage	Volt. range	MCA	MFA	Output (W)	FLA	Cooling	Heating
AD052MJERAB	1	50/60	220V	198V-242V	7	20	52	0.619	105	105
AD072MJERAB	1	50/60	220V	198V-242V	7	20	52	0.619	105	105
AD092MJERAB	1	50/60	220V	198V-242V	7	20	52	0.619	105	105
AD122MJERAB	1	50/60	220V	198V-242V	7	20	52	0.619	105	105
AD162MJERAB	1	50/60	220V	198V-242V	7.4	20	72	0.732	125	125
AD182MJERAB	1	50/60	220V	198V-242V	11.9	25	80	0.846	137	137
AD242MJERAB	1	50/60	220V	198V-242V	12.1	25	110	0.949	190	190
AD282MJERAB	1	50/60	220V	198V-242V	12.1	25	110	0.949	190	190

Symbols:
MCA: Min. circuit amps (A)
MFA: Max. fuse amps of circuit breaker Output: Fan motor rated output (w) FLA: Full load amps (A)
Notes:
1. Voltage range
The units are applicable for the electrical systems where voltage supplied to unit is in the range.
2. Maximum allowable voltage unbalance between phases is 2%.
*3. MCA=1.25*FLA MFA≤4*FLA.*
4. Power supply uses the circuit breaker.

16.7 Airflow and static pressure curves

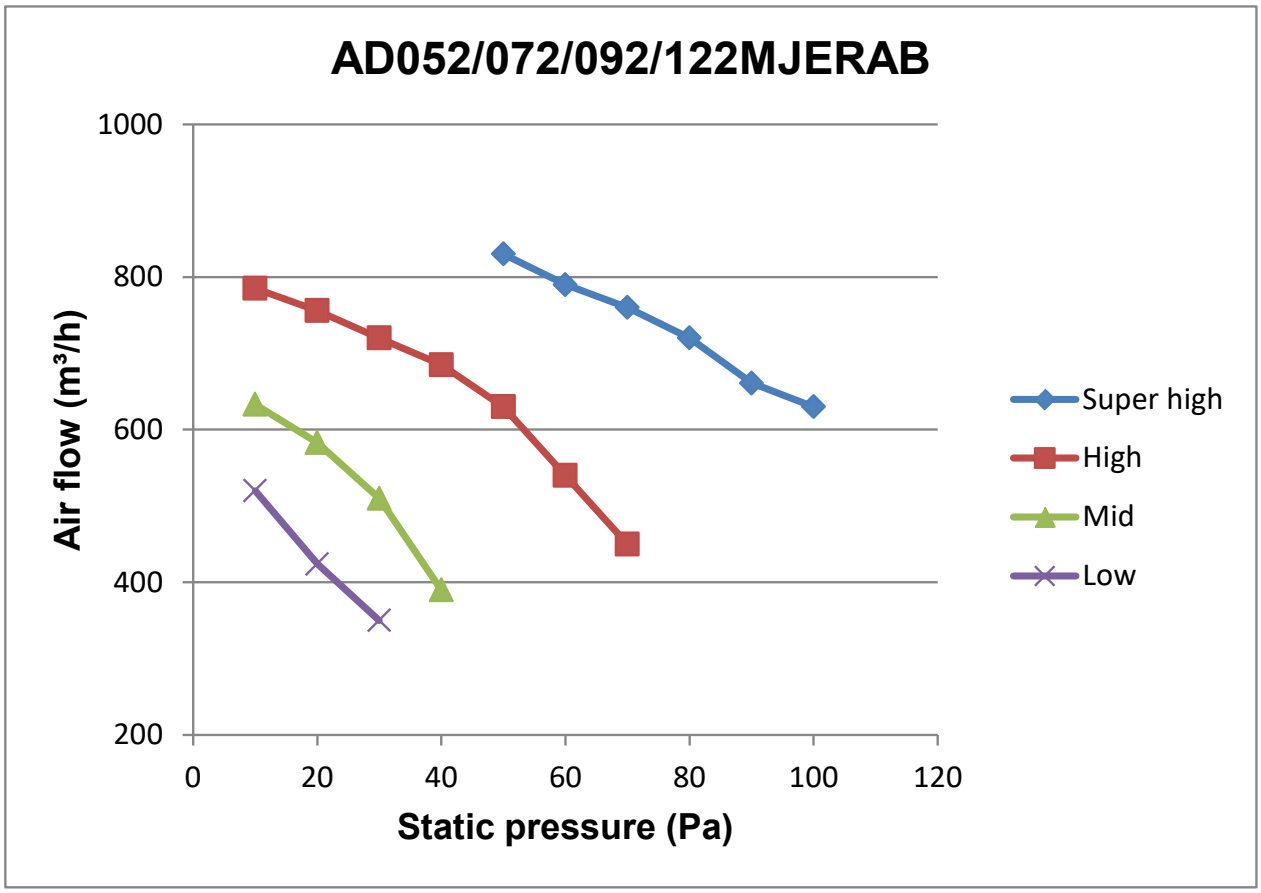

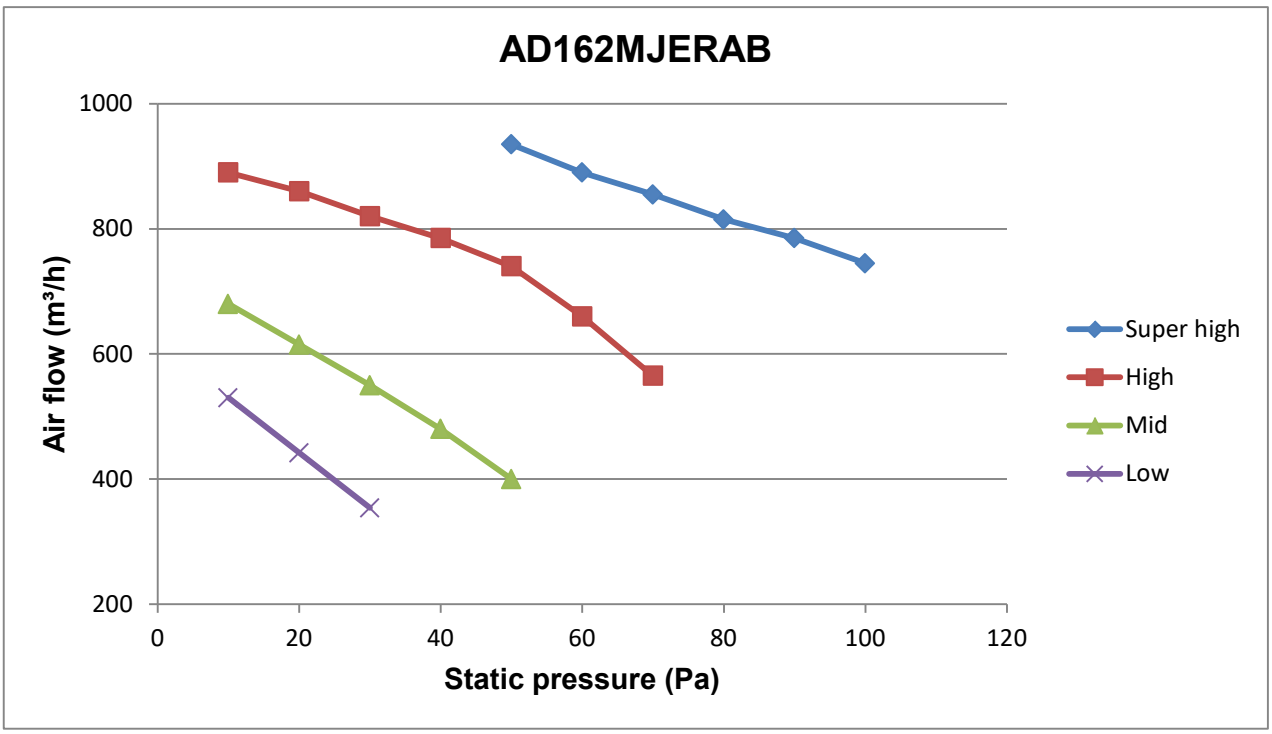

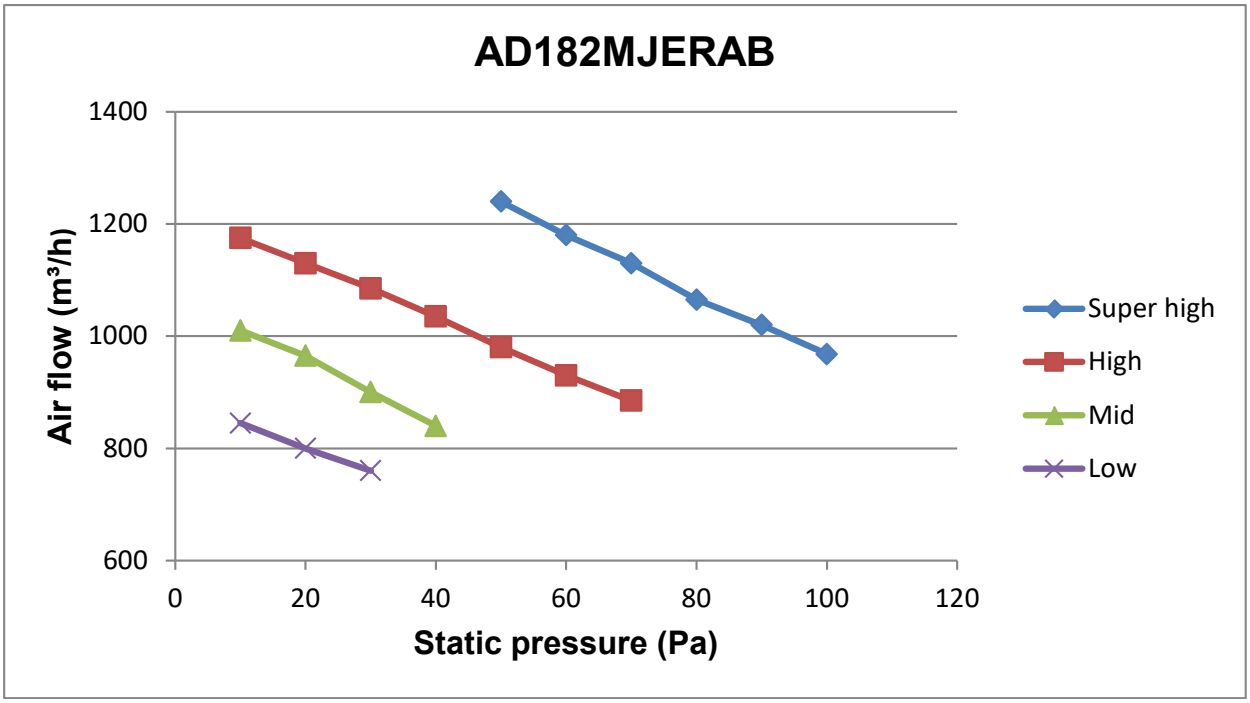
AD182MJERAB
1400
1200
1000
800
600
Air flow (m³/h)
0
20
40
60
80
100
120
Static pressure (Pa)
Super high
High
Mid
Low

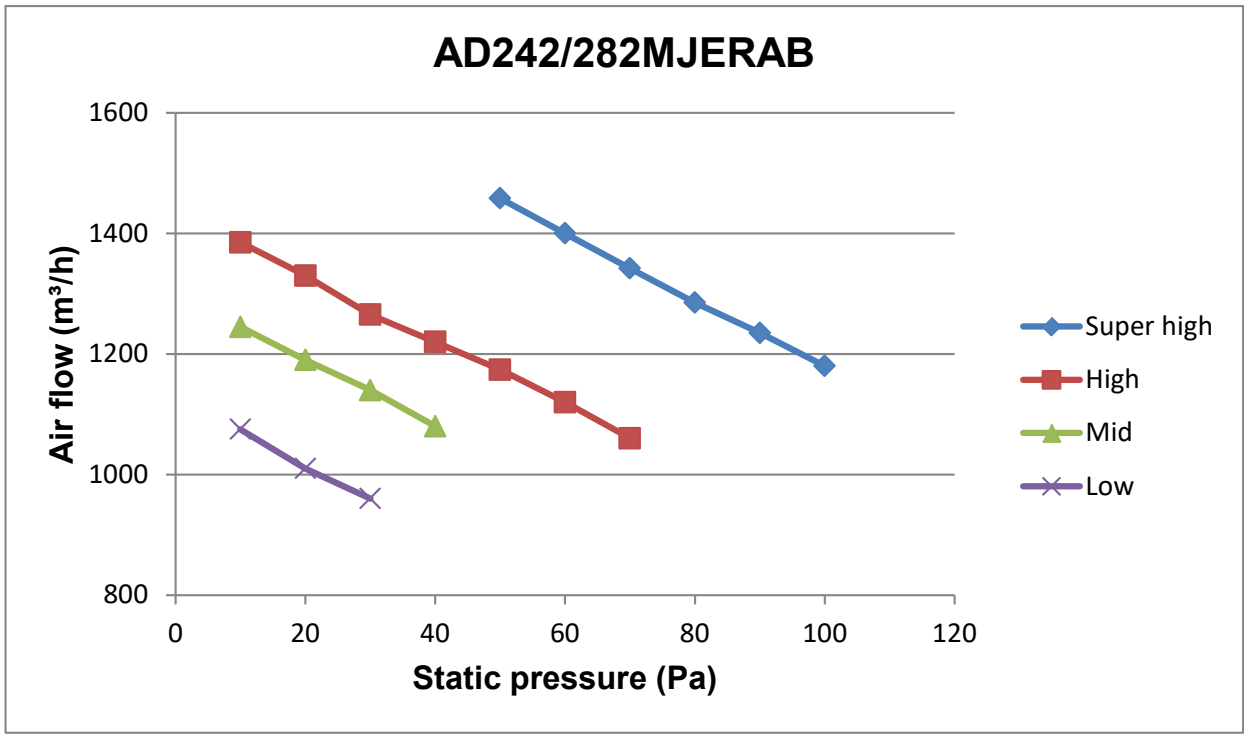
AD242/282MJERAB
1600
1400
1200
1000
800
Air flow (m³/h)
0
20
40
60
80
100
120
Static pressure (Pa)
Super high
High
Mid
Low

16.8 Sound pressure level

(1) Testing illustrate:

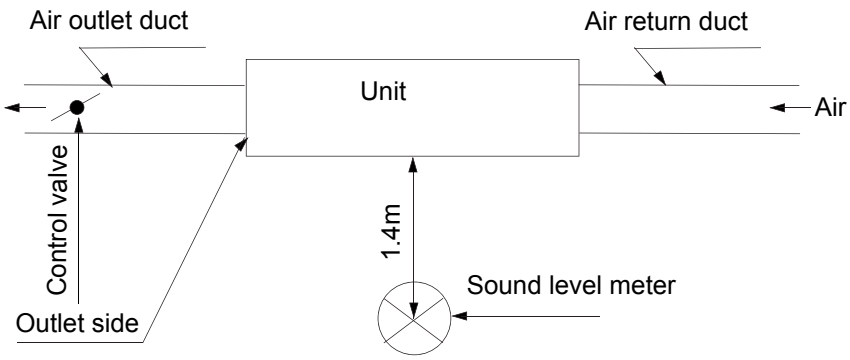

Testing position just below the central of the unit

(2) Testing condition:
a. Unit running in the standard condition
b. Test in the semi-anechoic chamber
c. Noise level varies from the actual factors such as room structure, etc.

AD052/072/92/122MJERAB

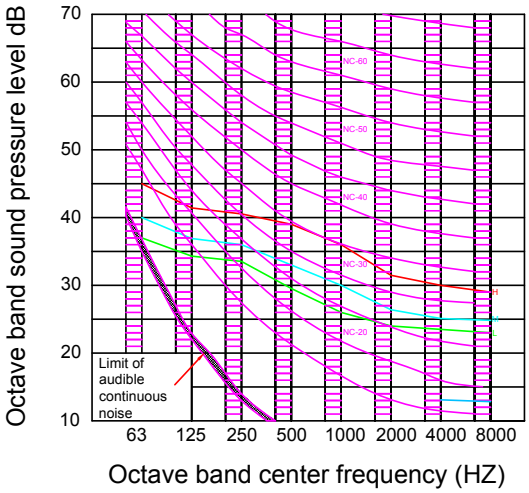

AD162MJERAB

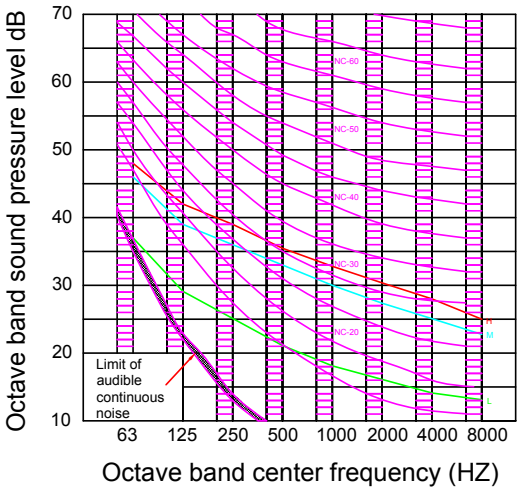

AD182MJERAB

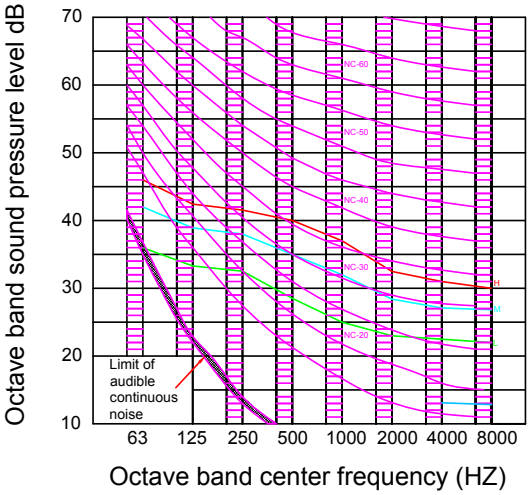

AD242/282MJERAB

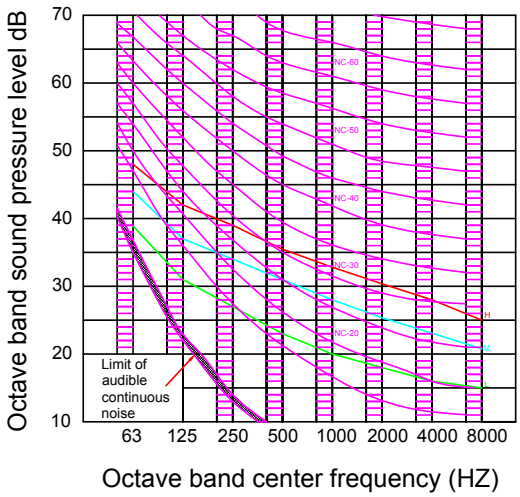

16.9 Installation

16.9.1 Parts and functions

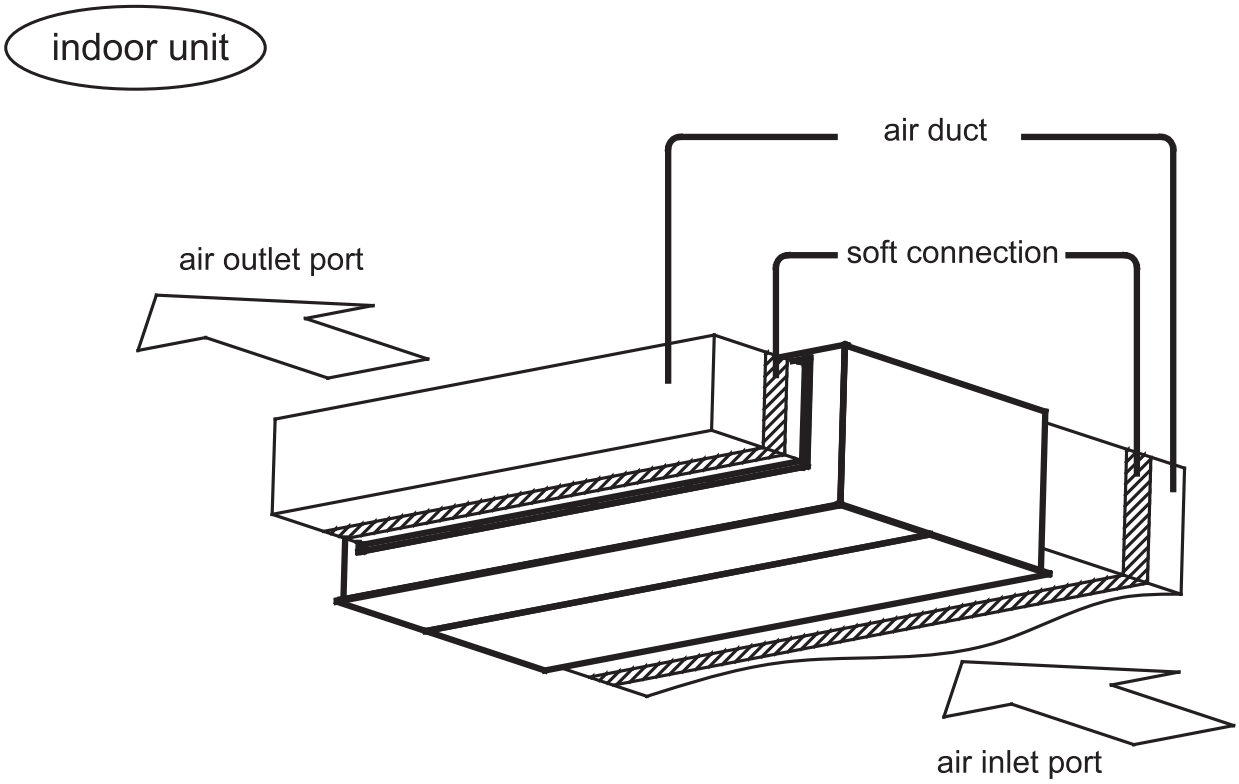

16.9.2 Safety

• If the air conditioner is transferred to a new user, this manual shall be transferred to the user, together with the conditioner.
• Before installation, be sure to read Safety Considerations in this manual for proper installation.
• The safety considerations stated below is divided into"⚠Warning"and "⚠Attention" The matters on severe accidents caused from wrong installation, which is likely to lead to death or serious injury, are listed in "⚠Warning" However, the matters listed in "⚠Attention" are also likely cause the severe accidents. In general, both of them are the important items related to the security, which should be strictly abided by.
• After the installation, perform test run to make sure everything is in normal conditions, and then operate and maintain the air conditioner in accordance with the User Manual. The User Manual should be delivered to the user for proper keeping.

⚠ Warning

• Please ask the special maintenance station for installation and repair. Water leakage, electric shocks or fire accidents might be caused from improper installation if you conduct the installation by your own.
• The installation should be conducted properly according to this manual. Water leakage, electric shocks or fire accidents might be caused from improper installation.
Please make sure to install the air conditioner on the place where can bear the weight of the air conditioner.
• The air conditioner can't be installed on the grids such as the non-special metal burglar-proof net. The place with insufficient support strength might cause the dropdown of the machine, which may lead to personal injuries.
• The installation should be ensured against typhoons and earthquakes, etc. The installation unconformable to the requirements will lead to accidents due to the turnover of the machine.
• Specific cables should be used for reliable connections of the wirings. Please fix the terminal connections reliably to avoid the outside force applied on the cables from being impressed on the cables. Improper connections and fixings might lead to such accidents as heating or fire accidents.
• Correct shapes of wirings should be kept while the embossed shape is not allowed. The wirings should be reliably connected to avoid the cover and the plate of the electrical cabinet lipping the wiring. Improper installation might cause such accidents as heating or fire accidents.
• While placing or reinstalling the air conditioner, except the specific refrigerant (R410A), don't let the air go into the refrigeration cycle system. The air in the refrigeration cycle system might lead to the cracking or personal injuries due to abnormal high pressure of the refrigeration cycle system.
• During installation, please use the accompanied spare parts or specific parts. If not, water leakage, electric shocks, fire accidents or refrigerant leakage might be caused.
• Don't drain the water from the drainpipe to the waterspout where may exist harmful gases such as sulfureted gas to avoid the harmful gases entering into the room.
• During installation, if refrigerant leakage occurs, ventilation measures should be taken, for the refrigerant gas might generate harmful gases upon contacting the flame.
• After installation, check if any refrigerant leakage exists. If the refrigerant gas leaks in the room, such things as air blowing heaters and stoves, etc. may generate harmful gases.
• Don't install the air conditioner at the places where the flammable gases may leak. In case the gas leakage occurs around the machine, such accidents as fire disasters may be caused.
• The drainpipe should be properly mounted according to this manual as to ensure the smooth drainage. In addition, heat preservation should be taken to avoid condensation. Improper drainpipe mounting might cause water leakage, which will get the articles at home wet.
• The refrigerant gas pipe and liquid pipe should be heat insulated to preserve heat. For inappropriate heat insulation, the water caused from the condensation will drop to get the article at home wet.

⚠ Attention

• The air conditioner should be effectively grounded. Electric shocks may occur if the air conditioner is ungrounded or inappropriately grounded. The wire for earthing shouldn't be connected to the connections on the gas pipe, water pipe, lightning rod or telephone.
• The breaker for electricity leakage should be mounted. If not, accidents such as electric shocks may happen.
• The installed air conditioner should be checked for electricity leakage by being powered.
• If the ambient humidity bigger than 80%, when the water discharge hole be blocked or the filter becomes dirty, or airflow speed change, there maybe leads to condensing water drop down, and at the same time there maybe some drops of water spit out.

16.9.3 Emergency running & Test operation

⚠ Attention

Notices during Operation

• It is not allowed to put any heating apparatus under the indoor units, for the heat may cause distortion of the units.

• Pay attention to the aeration condition to avoid anoxic symptom.

• Flammable apparatus should not be placed in the place where the air conditioner wind could reach directly, or incomplete burning of the apparatus may be caused.

• Check the mount table of the air conditioner for damage for a long period of operation.
If placed on the damaged table, the unit may drop down causing damage.

• Plants and animals should not be put to the place where wind of the air conditioner blows directly, otherwise damage to them may be caused.

• It cannot be used for the preservation of food, living creature, precise instrument and artworks, etc, otherwise damage may occur.

• Use the fuse with proper capacity. Metal wires and copper wires, etc., may cause fire or other faults.

• Do not use water heater or like next to the indoor unit and the wired controller. Water/ power leakage or short circuit may happen if the steam generating apparatus is working next to machine.

• Defrosting during heating
To improve the heating effect, the outdoor unit will perform defrosting automatically when frost appears on the outdoor unit during heating (approximately 2-10 min).
During defrosting, the fan of the indoor unit runs at a low speed or stops while that of the outdoor unit stops running.;

• Power should be cut off when the air conditioner is left unused for a long period. Power will be consumed if the air conditioner is not powered off. The power switch of the outdoor unit switch should be powered on 12 hours in advance before operation to protect the unit after a long period of storage.

• 3-minute protection
To protect the unit, compressor can be actuated with at least 3-minute delay after stopping.

• Close the window to avoid outdoor air getting in. Curtains or window shutters can be put down to avoid the sunshine.

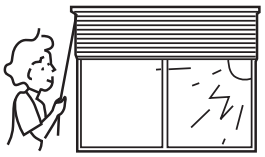

• Do not touch the switch with the wet hand to avoid power shock.

• Stop running and switch off the manual power switch when cleaning the unit.

• During the operation of the control unit, don't switch off the manual power switch and the controller can be used. Please do not press the liquid crystal zone of controller to prevent damage.

• Cleaning the unit with water may cause electric shock.

• Do not put flammable spray close to the air conditioner. Don't inject flammable spray towards the air conditioner, which may cause fire.

• Stopping fan rotation
The unit which stops operating will actuate the fan for a 2-8 min swing every 30-60 minutes for protecting the unit while other indoor unit are in the operating state.

• This appliance is not intended for use by persons (including children) with reducedphysical, sensory or mental capabilities, or lack of experience and knowledge, unless they have been given supervision or instruction concerning use of the appliance by a person responsible for their safety.

• Children should be supervised to ensure that they do not play with the appliance.

16.9.4 Maintenance

※ Only when the air cleaner is switched off and disconnected to the power supply can it be cleaned, or electric shock and injury may appear.

Cleaning the air outlet port and the shell:

⚠ Attention

Don't use gasoline, benzene, diluents, polishing powder or liquid insecticide to clean them.
Do not clean them with hot water of above 50°C to avoid fading or distorting.

- Wipe them with soft dry cloth.
- Water or neutral dry cleanser is recommended if the dust cannot be removed.
- The Wind Deflector can be dismantled to clean (as below).

Cleaning Wind Deflector:

- Do not wipe the wind deflector with water forcibly to avoid falling off.

Cleaning Air Cleaner:

⚠ Attention

- Don't rinse the air cleaner with hot water of above 50°C to avoid fading and distorting.
- Don't put the air cleaner on the fire to dry to avoid catching fire.

- Wipe dust with water or dust collector.

(A) Wipe dust with dust collector.

(B) Clean it with soft bush in mild detergent if there is too much dust on it

Throw off the water and airing it in the cool dry condition.

Maintenance before and after Operating Season

Before Operating Season:
1. Please make the following checkup. If abnormal condition occurs, consult the after-service personnel.
   There is no blockage in inlet port and outlet port of outdoor and indoor units.
   The ground line and the wiring are in the proper state
2. After cleaning, the air cleaner must be mounted.
3. Switch on to the power.

After Operating Season:
1. In sunny days, blowing operation can be performed for half a day to make the inside of machine dry.
2. Electrical power should be cut down to economize electricity, or the machine will still consume power.Air cleaner and shell must be mounted after cleaning.

16.9.5 Fault checkup

Please check the following when consigning repair service:

	Symptoms	Reasons
All these are not problems	• Water flow sound	Water flow sound can be heard when starting operation, during operation or immediately after stopping operation. When it starts to work for 2-3 minutes, the sound may become louder, which is the flowing sound of refrigerant or the draining sound of condensed water.
	• Cracking sound	During operation, the air conditioner may make the cracking sound, which is caused from the temperature changes or the slight dilation of heat exchanger.
	• Terrible smell in outlet air	The terrible smell, caused from walls, carpet, furniture, clothing, cigarette and cosmetics, attaches on the conditioner.
	• Flashing operating indicator	When switching it on again after power failure, turn on the manual power switch and the operating indicator flashes.
	• Awaiting indication	It displays the awaiting indication as it fails to perform refrigerating operation while other indoor units are in heating operation. When the operator set it to the refrigerating or heating mode and the operation is opposite to the setting, it displays the awaiting indication.
	• Sound in shutdown indoor unit or white steam or cold air	To prevent oil and refrigerant from blocking the shutdown indoor units, refrigerant flows in the short time and make the sounds of refrigerant flowing. Otherwise, when other indoor units performs heating operation, white steam may occur; during refrigerating operation, cold air may appear.
	• Clicking sound when switching the air condition on	When the conditioner is powered on, the sound is made due to the resetting of the expansion valve.
Please make another check.	• Start or stop working automatically	Check if it is in the state of Timer-ON and Timer-OFF.
	• Failure to work 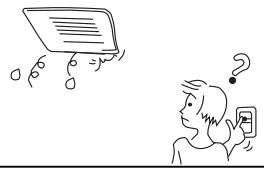	Check if there is a power failure. Check if the manual power switch is turned off. Check if the supply fuse and breaker are disconnected. Check if the protective unit is working. Check if refrigerating and heating functions are selected simultaneously with the awaiting indication on line control.
	• Bad cooling & heating effects	Check if air intake port and air outlet port of outdoor units are blocked. Check if the door and windows are open. Check if the filtering screen of air cleaner is blocked with sludge or dust. Check if the setting of wind quantity is at low wind. Check if the setting of operation is at the Fan Operation state. Check if the temperature setting is proper.

Under the following circumstances, immediately stop the operation, disconnect the manual supply switch and contact the after-service personnel.

- When buttons are inflexible actuated;
- When fuse and breaker have been burnt over and over;
- When there are foreign objects and water in the refrigerator;
- When it cannot still be operated after removing the operation of protective unit;
- When other abnormal conditions occur.

16.9.6 Installation procedures

The standard attached accessories of the units of this series refer to the packing; prepare other accessories according to the requirements of the local installation point of our company.

1. Before installation [before finishing the installation, don't throw away the attached parts required for the installation]

• Determine the route to move the unit to the installation site;
• Don't tear the package open before moving the unit to the installation site. When unpacking is needed, a soft material or protector block with ropes can be used to lift the unit to avoid damaging or scraping of the unit.

2. Select the installation site

(1) The installation site should be selected according the following conditions, which should be approved by users.
• where an ideal air distribution can be ensured;
• where there is no blockage in the air passage;
• where the condensed water can be drained out properly;
• where the strength can bear the weight of the indoor unit;
• where enough space can be ensured for maintenance. The outside air should be input from the outdoor directly from the blast pipe. If the blast pipe can't be jointed, the air can't be input from the suspended ceiling.
• where the lengths of the piping between indoor units and outdoor units are within the allowable range (refer to Installation of Outdoor Units)
• where the distance of at least 1m between indoor units, outdoor units, mains supply, connecting wires and television or radio should be kept as to avoid the image disturbance and noises of the above electrical appliances. (Even if 1m can be ensured, noise might occur if there is strong electric wave.) Additionally, equipments, television or other valuables can't be put under the unit as to avoid the condensed water of the unit from dropping into the above articles, causing damaging.
(2) Height of Ceiling:
The ceiling should be located at the place, where the central position of air outlet port is less than 3m high above the ground.
(3) Hoisting studs should be used during installation. Check if the location can bear the weight of the unit. Reinforce it before installation if necessary.
(4)The dimension of maintenance
Make sure that it is easy to demount the electrical control box, fan, montor, filter.

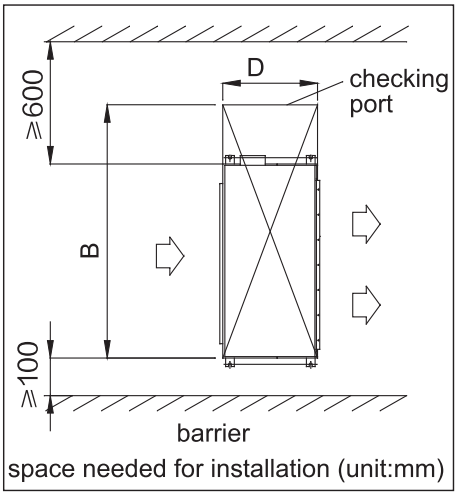

space needed for installation (unit:mm)

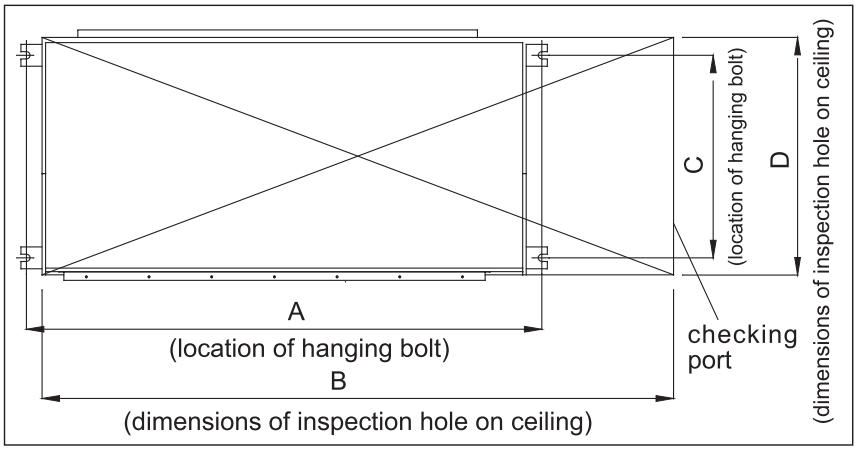

Size / Model	A(mm)	B(mm)	C(mm)	D(mm)
AD052-162 MJERAB	761	1211	619	700
AD182-282 MJERAB	1161	1611	619	700

3. Preparation before Installation

(1) Location relation between inspection hole on the ceiling and the unit and the hoisting studs (unit: mm).

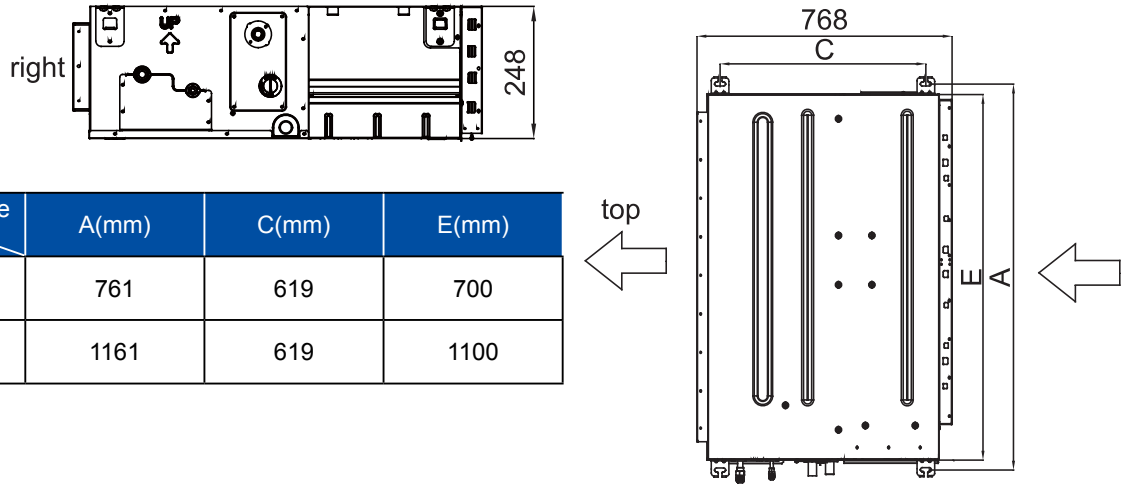

Size / Model	A(mm)	C(mm)	E(mm)
AD052-162MJERAB	761	619	700
AD182-282MJERAB	1161	619	1100

(2) If necessary, make a hole for installation and inspection on the ceiling. (used for the situation with a ceiling)
• For the size of the inspection hole on the ceiling, please refer to the above drawing.
• Before installation, finish all the preparations for all piping connected to indoor units (refrigerant, water drainage) and wiring (connection line of the line control, connection line between indoor units and outdoor unit) so that they can be connected with indoor units right after installation.
• For the inspection hole, the ceiling might be reinforced to keep the evenness of the ceiling and avoid the vibration of the ceiling. For details, please consult the construction contractor.

(3) Install the hoisting studs (M10 bolts)
In order to support the weight of the unit, use barb bolts in the situation with a ceiling. In the situation with the new ceiling, use inlaid bolts, embedded bolts or other parts provided on site. Before proceeding the installation, adjust the gap between the bolt and the ceiling.

(4) Installation of Indoor Units
• Fix the indoor unit with the hoisting stud. If necessary, the machine can be hanged on the beam with bolts instead of the hoisting stud.

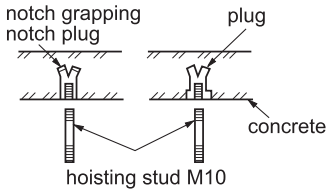

NB:
When the sizes of the main unit don't match the hole on the ceiling, regulate the slot on the hanging bracket.

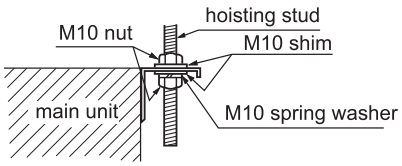

Adjusting the level

Adjust the level with a level meter or according to the following ways:
• Make the adjustment as shown in the figure.

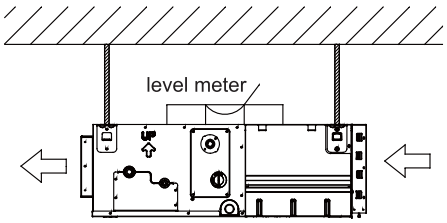

Choice of Blowing Wind from Blower (when using the high performance filter)

The blower can select the maximum static pressure and standard static pressure air volume through the controller, which is set to the standard static pressure before delivery. When the static pressure rises with the optional device is used, such as high performance filters. the static pressure selection is performed as follows:
Remote controller setting mode: remote control selects static pressure. In high wind mode, press the health button 12 times within 5 seconds, the buzzer will reverberate 4 times, set the maximum static pressure successfully. Press the health button 12 times within 5 seconds, the buzzer will sound 2 times, the maximum static pressure function will be canceled, and the default setting will be restored.
YR-E17 Wired Controller setting mode: keep pressing the key Set and the key ▲ minus 5 seconds to enter the advanced setting, press the key Fan to switch to the function category b (temperature zone display), at this time function category code flashes (clock zone display), press the key ▲ or ▼ to switch the value to 11, then press the key Set, the existing static pressure display is performed in the time zone, and the specific information flashes. When it is flashing, press the key ▲ or ▼ to change it. After the change is completed, press the key Set to confirm. 01 means the default standard static pressure, 02 means the maximum static pressure.

Static Pressure Range
unit: Pa

Standard Static Pressure	Max. Static Pressure
50	100

4. Drainpipes

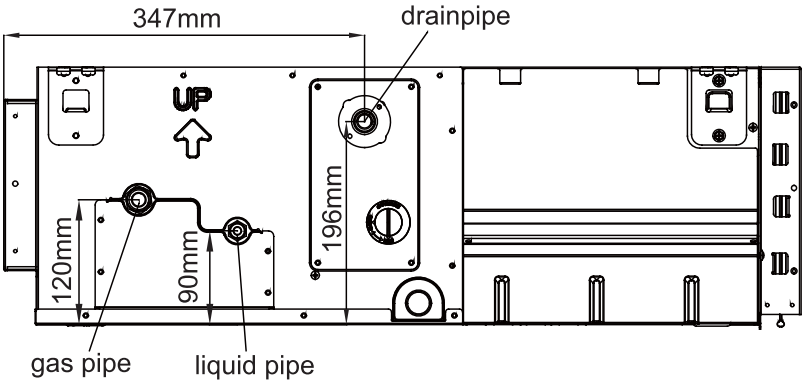

(a) Keep a gradient (1/50-1/100) of the drainpipes and avoid lobing or curving.

- Proper Piping

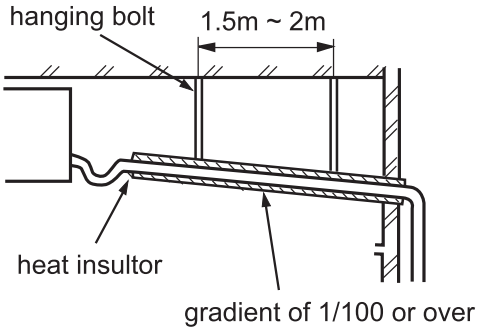

- Improper Piping

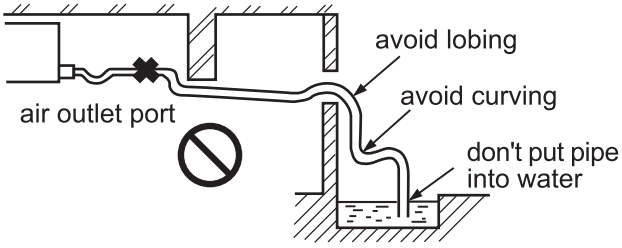

(b) When connecting the drainpipe to the equipment, don't apply too much force on one side of the equipment. Meanwhile, the piping should be positioned as close to the equipment as possible.

(c) For the drainpipe, the general purpose hard PVC tube can be purchased at local shops. During the connection, insert the end of PVC tube into the wash port and fasten it with drainage hose and thread clip. Binding agents shouldn't be used to connect the wash port and drainage hose.

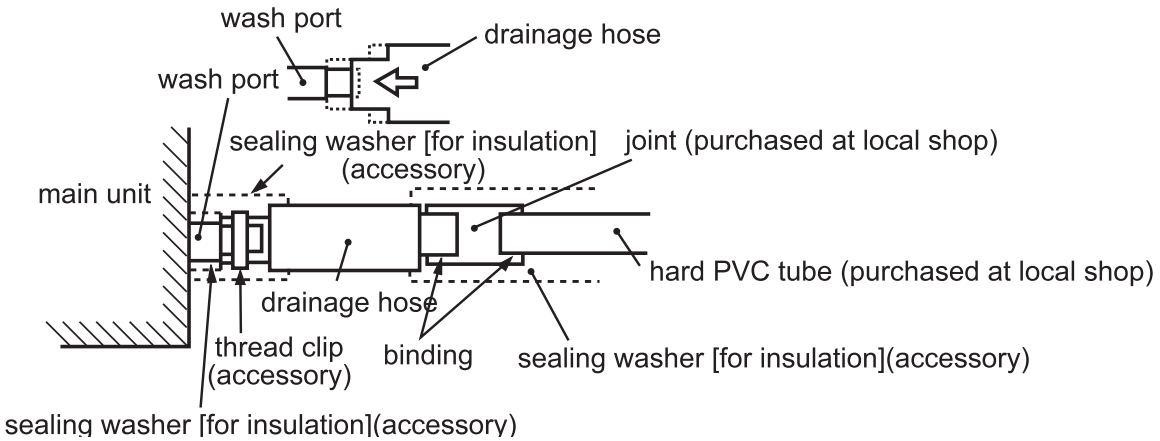

(d) When the laid drain piping is used for multiple equipments,the public piping should be lower about 100mm than the wash ports of equipments, as shown in the figure.
Thicker pipes should be used for this application.

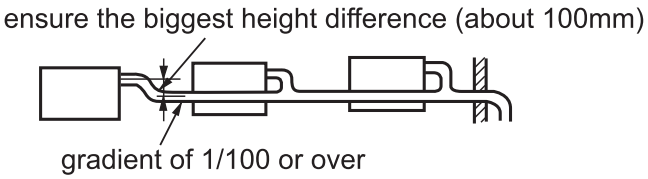

(e) The hard PVC tube in the room must be provided with the heat insulating layer.
(f) Don't place the drainpipes at the places where there is irritant gas. Don't put the drainpipe directly into the sewer, where there might be gases with sulfur.
(g) Backwater bend
Because the drainage was laied in the position of binging Subatmospheric pressure easily, gain of elevation of water in the drain pan conducesd Leakage water, for avoiding Leakage water , design a Backwater bend. Configuration of Backwater bend can be cleaned, a " T " joint can be used in installing as shown as in the picture below.
Backwater bend was installed in the neighborhood of airconditioning
A backwater bend was designed in the middle of drain pipe s
shown as in the picture.

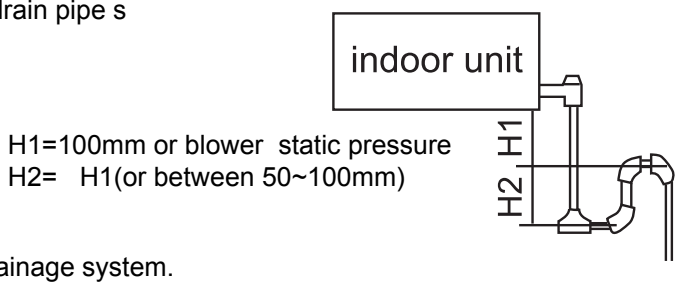

Testing Drainage System

(a) After finishing the electrical system, test the drainage system.
(b) During testing, make sure that the water flow passes the piping correctly without any water leakage at the connection.
(c) In the condition of new house, test the drainage system before fitting up the ceiling.
(d) Even if it is installed in the season needed to heating, the testing should also be performed.

procedures

(a) Provide about 1000cc of water to the equipment via air outlet port with the feed pump.
(b) During refrigerating operation, check the drainage system..

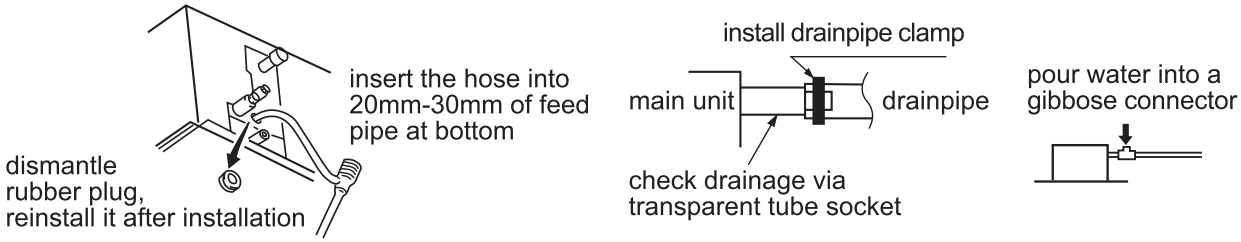

Before completing the electrical connection, a gibbose connector shall be installed on the drainpipe as to provide it with a water inlet port. Then, if any leakage exists in the piping, check it to make the water flow of the drainpipe smooth.

5. Installation of Air Return & Air Exhaust Pipes

For the choice and installation of air return port, air return pipe, air exhaust port and exhaust pipe, please consult service personnel of Haier company. Calculate the design chart and exterior static pressure, and select the exhaust pipe with appropriate length and shapes.

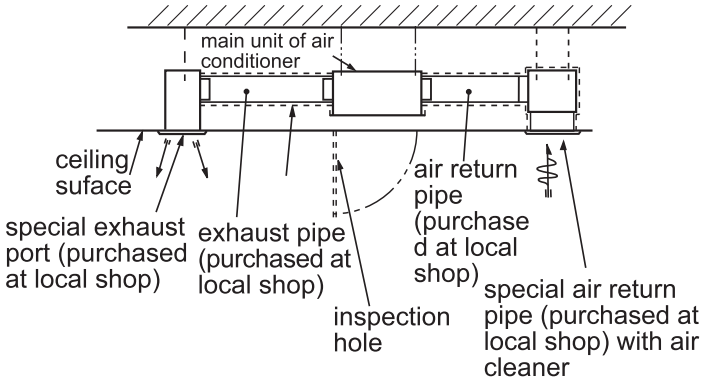

• The length difference between pipes should be limited to be less than 2:1;
• Make the piping as short as possible;
• Keep the min. elbow quantity;
• Wind the heat insulating material around the flange between the main unit and the exhaust pipe for heat insulation and sealing. Install the piping before fitting up the ceiling.

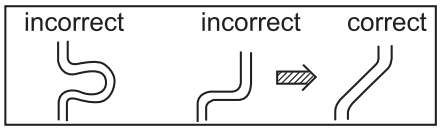

6. Cautions in Installation of Air Return Pipe & Exhaust Pipe

• It is recommended to use the blast pipes, which can be anti-condensation and absorb sound. (purchased at local shops)
• Complete the installation of the blast pipes before fitting up the suspended ceiling.
• Heat insulation should be made for the blast pipes.
• The special exhaust port should be arranged at the place where the air is distributed evenly.
• An inspection hole should be left on the surface of the ceiling for future maintenance.

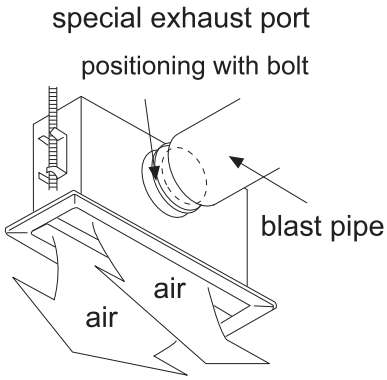

7.Connection of return air duct (setting back air return opening when leaving factory)

Remarks:
In installation, you can select the lower air return or back air return by adjusting the location of air inlet frame. Air return from bottom will influence the unitnoise,so we suggest use rear return installation.

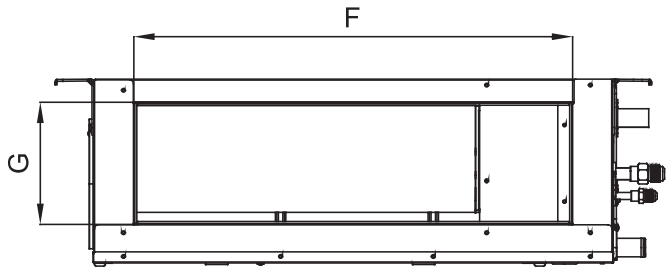

Size / Model	F (mm)	G (mm)
AD052-162MJERAB	592	165
AD182-282MJERAB	992	165

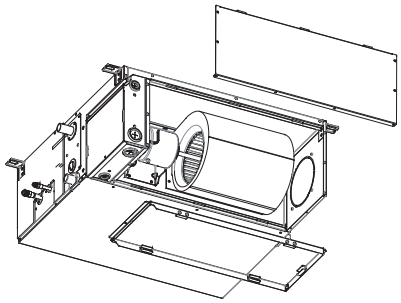

Bottom air return opening

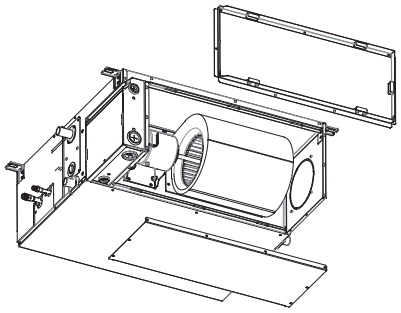

Back air return opening

8.Concatenation means of exchanging fresh air

(1) Disassemble the fresh air flange, and cut away the nummular component in the middle

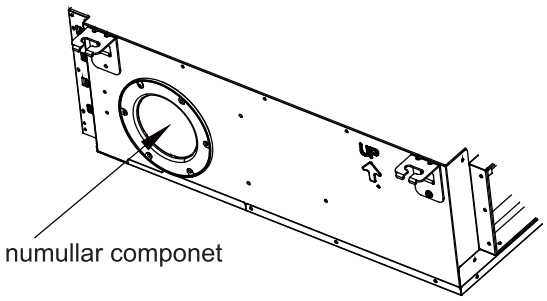

(2) Reverse the fresh air flange,and re-install it

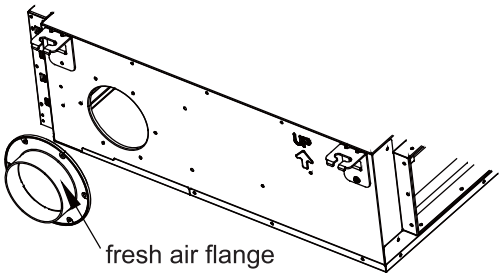

(3) Airproof the joint by airproof cingulum avoiding

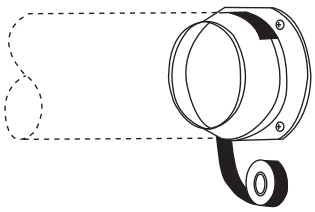

9.Install outlet flange

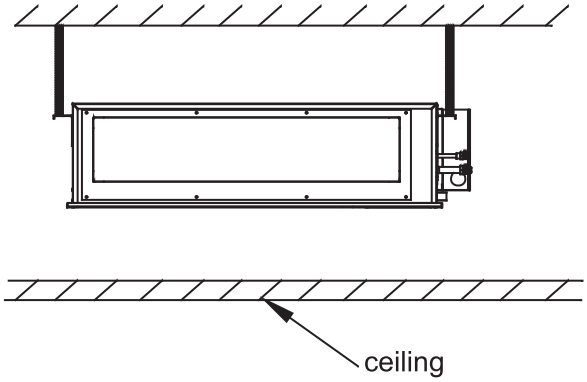

Note: You can select not to connect with the flange. Instead of it, you can use the round plastic air outlet (purchased by user)

10. Examples for Bad Installation

• The unit is not equipped with the air return pipe and the inner side of the suspending ceiling is used as the blast pipe, causing the humidity increasing due to irregular air mass, strong wind or sunlight from the outside world.
• There might be condensate dropping down at the outer side of the blast pipe. The humidity is high, even if the inner side of the suspended ceiling isn't used as a blast pipe in new concrete buildings. At this time, the whole body should use the thermo wool for heat preservation (the thermo wool can be packed with a steel wire).
• It is operated under the conditions beyond the limits, leading to the overload of the compressor.
• Affected by the capacity of the exhaust fan, and the strong wind and wind direction in the outer flue, when the blowing quantity of the air conditioner exceeds the limits, the drained water of the heat exchanger will overflow, causing water leakage.

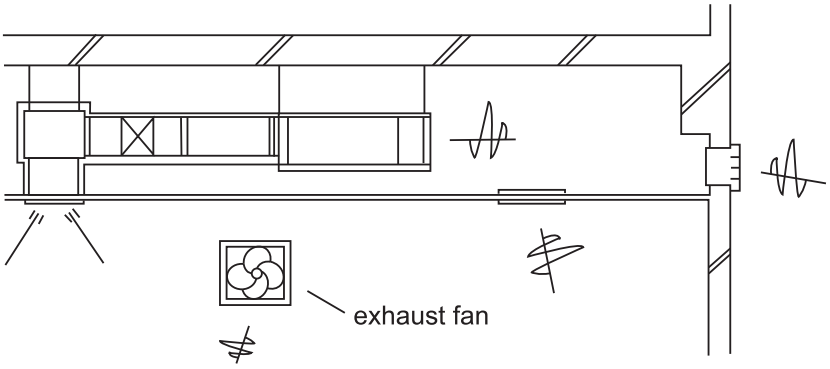

example of bad installation

11. Refrigerant Tube

Tubing Permissible Length & Height Difference

Please refer to the attached manual of outdoor units.

Piping Materials & Heat Insulating Materials

As to prevent condensation, heat insulating treatment should be performed. The heat insulating treatment for gas and liquid piping should be done respectively.

Piping Material	Hard PVC tube VP31.5mm(inner bore)
Heat Insulating Material	Vesicant polythene thickness: over 7mm

Tubing Materials & Specifications

Model		AD052~092MJERAB	AD122~182MJERAB	AD242~282MJERAB
Tubing Size (mm)	Gas pipe	Ø9.52	Ø12.7	Ø15.88
	Liquid pipe	Ø6.35	Ø6.35	Ø9.52
Tubing Material	Phosphor deoxybronze seamless pipe (TP2) for air conditioner			

Refrigerant Filling Amount

Add the refrigerant according to the installation instruction of outdoor unit. The addition of R410A refrigerant must be performed with a measure gage to ensure the specified amount or compressor failure can be caused by filling too much or little refrigerant.

Connecting Procedures of Refrigerant Tubing

Proceed the flare tube connecting operation to connect all the refrigerant tubes.
- Dual wrenches must be used in the connection of indoor unit tubing.
- Mounting torque refers to the right table

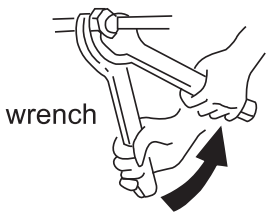

Outer Diameter of Tubing (mm)	Mounting Torque
Ø6.35	11.8~13.7N.m
Ø9.52	32.7~39.9N.m
Ø12.7	49.0~53.9N.m
Ø15.88	78.4~98.0N.m
Ø19.05	97.2~118.6N.m

Cutting and Enlarging

Cutting or enlarging pipes should be proceeded by installation personnel according to the operating criterion if the tube is too long or flare opening is broken.

Vacuumizing

Vacuumize from the stop valve of outdoor units with vacuum pump. Refrigerant sealed in indoor machine is not allowed to use for vacuumization.

Open All Valves

Open all the valves of outdoor units. [NB: oil balancing stop valve must be shut up completely when connected one main unit.

Checkup for Air Leakage

Check if there is any leakage at the connecting part and bonnet with hydrophone or soapsuds.

Connecting

Connecting circular terminals:

1. Connecting circular terminals:
The connecting method of circular terminal is shown in the Fig. Take off the screw, connect it to the terminal tier after heading it through the ring at the end of the lead and then tighten it.
2.Connecting straight terminals:
The connection methods for the circular terminals are shown as follows: loosen the screw before putting the line terminal into the terminal tier, tighten the screw and confirm it has been clamped by pulling the line gently.
3.Pressing connecting line
After connecting line is completed, press the connecting line with clips which should press on the protective sleeve of the connecting line.

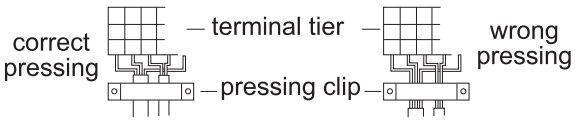

16.9.7 Electrical wiring

⚠ Warning

• Electrical construction should be made with specific mains circuit by the qualified personnel according to the installation instruction. Electric shock and fire may be caused if the capacity of power supply is not sufficient.
• During arranging the wiring layout, specified cables should be used as the mains line, which accords with the local regulations on wiring. Connecting and fastening should be performed reliably to avoid the external force of cables from transmitting to the terminals. Improper connection or fastness may lead to burning or fire accidents.
• There must be the ground connection according to the criterion. Unreliable grounding may cause electrical shocks. Do not connect the grounding line to the gas pipe, water pipe, lightening rod and telephone line.

⚠ Attention

• Only copper wire can be used. Breaker for electric leakage should be provided, or electric shock may occur.
• The wiring of the mains line is of Y type. The power plug L should be connected to the live wire and plug N connected to null wire while should be connected to the ground wire. For the type with auxiliary electrically heating function, the live wire and the null wire should not be misconnected, or the surface of electrical heating body will be electrified. If the power line is damaged, replace it by the professional personnel of the manufacturer or service center.
• The power line of indoor units should be arranged according to the installation instruction of indoor units.
• The electrical wiring should be out of contact with the high-temperature sections of tubing as to avoid melting the insulating layer of cables, which may cause accidents.
• After connected to the terminal tier, the tubing should be curved into be a U-type elbow and fastened with the pressing clip.
• Controller wiring and refrigerant tubing can be arranged and fixed together.
• The machine can't be powered on before electrical operation. Maintenance should be done while the power is shut down.
• Seal the thread hole with heat insulating materials to avoid condensation.
• Signal line and power line are separately independent, which can't share one line. [Note: the power line, signal line are provided by users. Parameters for power lines are shown as below: 3x(1.0-1.5) mm2; parameters for signal line: 2x(0.75-1.25)mm2(shielded line)]
• 5 butt lines (1.5mm) are equipped in the machine before delivery, which are used in connection between the valve box and the electrical system of the machine. The detailed connection is displayed in the circuit diagram.

Supply Wiring Drawing

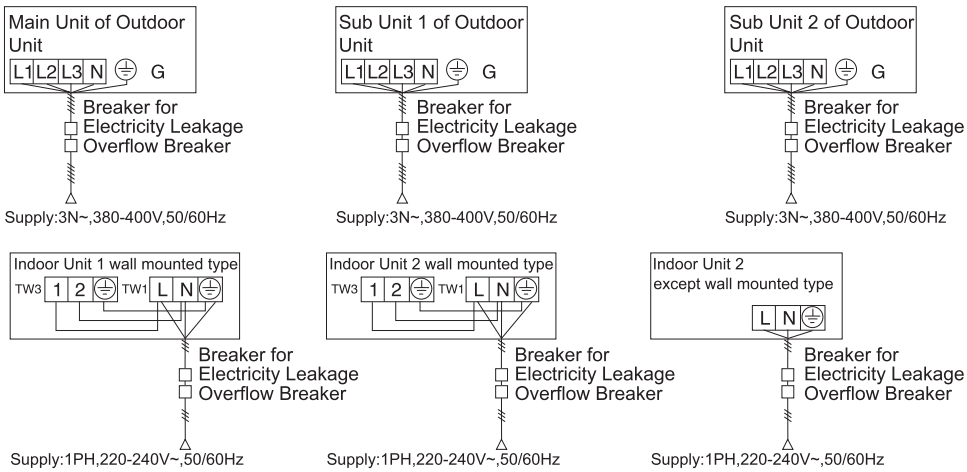

• Indoor units and outdoor units should be connected to the power source separately. Indoor units must share one single electrical source, but its capacity and specifications should be calculated. Indoor & outdoor units should be equipped with the power leakage breaker and the overflow breaker.

Signal Wiring Drawing

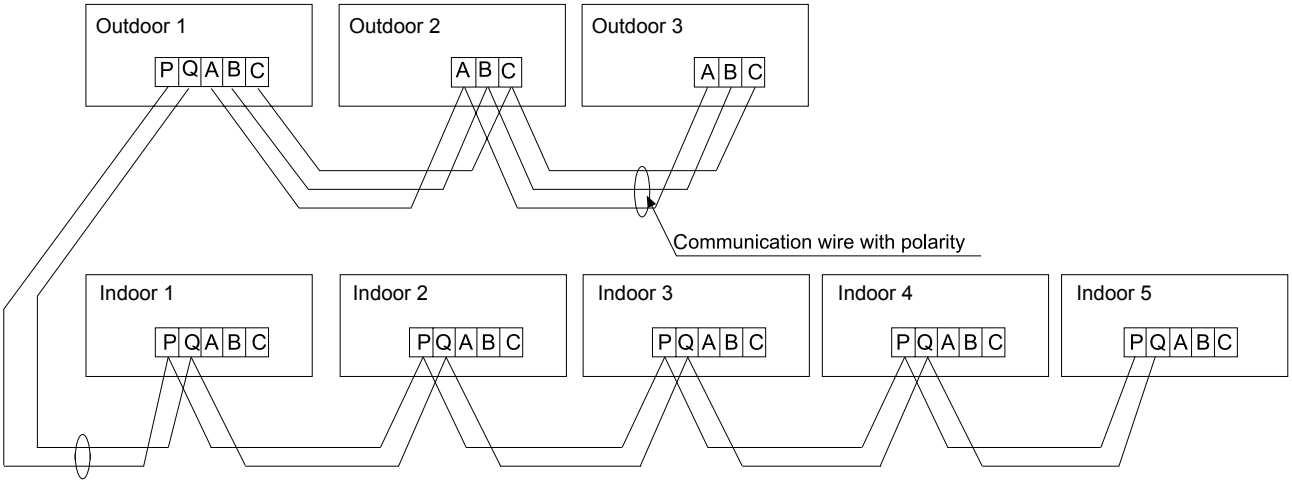

Outdoor units are of parallel connection via three lines with polarity. The master unit, central control and all indoor units are of parallel connection via two lines without polarity. The singal line between wired controller and indoor units are polarity

There are three connecting ways between wired controller and indoor units:

A. One wired controller controls one indoor unit, the wired controller connects with the ABC terminal of indoor unit.

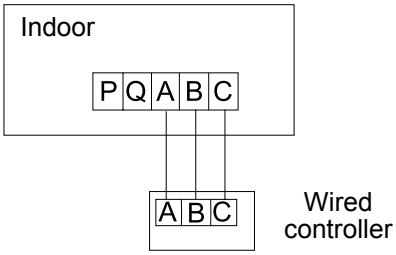

B. Two wired controllers control one indoor unit. Either of the wired controls can be set to be the master wired controller while the other is set to be the slave wired controller.

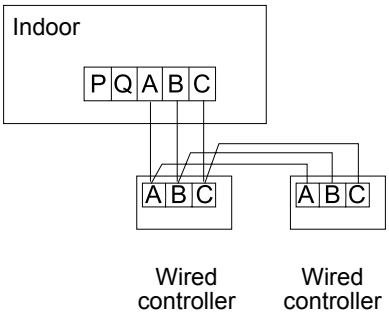

Master and slave controller setting method for YR-E17, other controllers' setting method please refer to the controller manual

No.	Type	State of switch	Function description
SW1-1	Select the master or the slave controller	ON	Slave controller
		OFF	Master controller

C. One wired controller controls multiple units

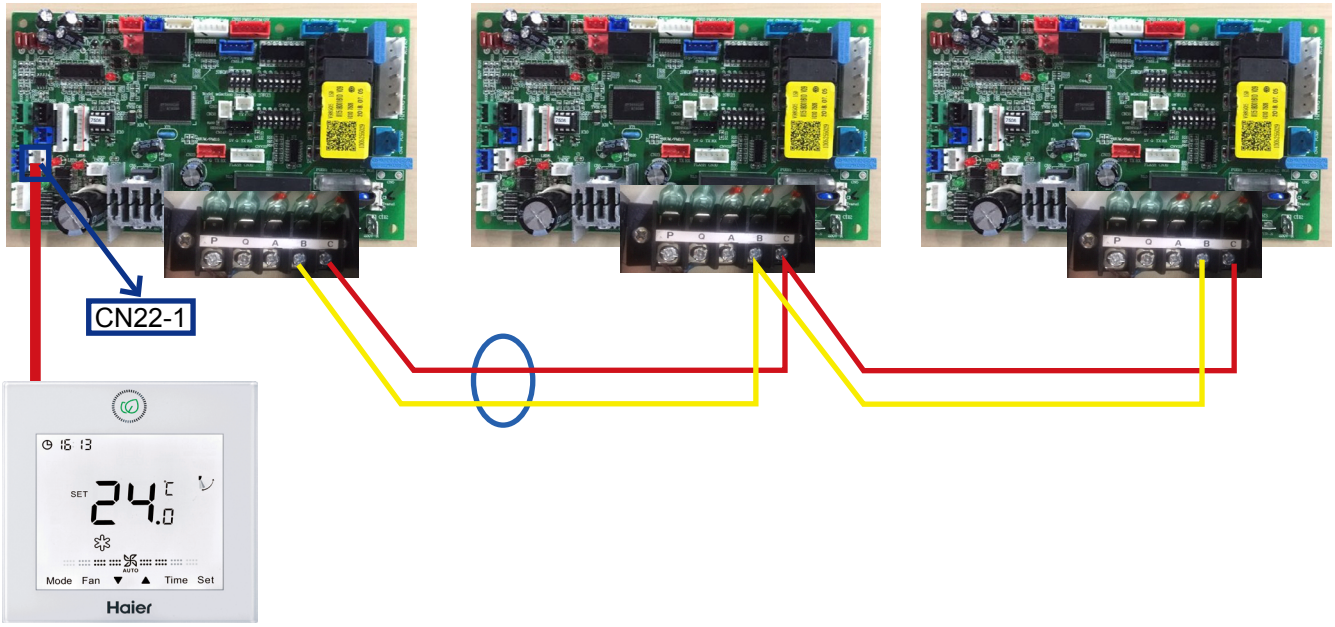

Note:

1. Plug the wired controller terminal to the CN22-1 terminal of master unit which wired address is 0, the slave unit only connects BC terminal.
2. Wired address setting

		[1]	[2]	[3]	[4]	Wired control address
SW01_1 SW01_2 SW01_3 SW01_4	Wired control address	**OFF**	**OFF**	**OFF**	**OFF**	Master unit in group control
		OFF	OFF	OFF	ON	Slave unit 1 in group control
		OFF	OFF	ON	OFF	Slave unit 2 in group control
		OFF	OFF	ON	ON	Slave unit 3 in group control
		…	…	…	…	……
		ON	ON	ON	ON	Slave unit 15 in group control

3. One controller can Max. control 16 indoor units.
4. Hand-in-hand connection method
5. The singal line is polarity

The combination of multiple indoor units can be controlled by wired controller or remote controller.
※ Switching mode of Wired control master unit/ Wired control slave unit/ remote control types can be used for switching over ※

Setting mode / Socket/dip switch	Wired control master unit	Wired control slave unit	Remote control
SW01-[2][3][4]	All OFF	[0][0][1]	All OFF
CN21 socket	Null	Null	Connect to remote receiver
Terminal block (control)	A,B,C connect with wired controller	B,C connect with wired controller	A,B,C null

Note:

The wiring for the power line of indoor unit, the wiring between indoor and outdoor units as well as the wiring between indoor units:

Indoor power supply wiring & signal wiring between indoor ahd outdoor & signal wiring between indoors.

Items / Total Current of Indoor Units(A)	Cross Section(mm^2)	Length (m)	Rated Current of Overflow Breaker(A)	Rated current of residual Circuit Breaker (A) Ground Fault Interruptor(mA) Response time(S)	Cross Sectional Area of Singal Line	
					Outdoor-Indoor (mm^2)	Indoor-indoor (mm^2)
<7	2.5	20	10	10A, 30mA, 0.1S or below		
≥7 and <11	4	20	16	16A, 30mA, 0.1S or below	2 cores x0.75-2.0 mm^2 shieleded lin	
≥11 and <16	6	25	20	20A, 30mA, 0.1S or below		
≥16 and <22	8	30	32	32A, 30mA, 0.1S or below		
≥22 and <27	10	40	32	32A, 30mA, 0.1S or below		

• The electrical power line and signal lines must be fastened tightly.
• Every indoor unit must have the ground connection.
• The power line should be enlarged if it exceeds the permissible length.
• Shielded lays of all the indoor and outdoor units should be connected together, with the shielded lay at the side of signal lines of outdoor units grounded at one point.
• It is not permissible if the whole length of signal line exceeds 1000m.

Signal Wiring of Wired controier

Length of Line (m)	Wiring Dimensions
≤250	0.75mm^2 x 3 core shielding line

※The shielding lay of the signal line must be grounded at one end.
※The total length of the signal line shall not be more than 250m.